ITEM NO.	PART NUMBER	DESCRIPTION	MATERIAL	STOCK SIZE	QTY.
1	P040100001	Honda XR 650 L Foot Peg Base	SS304	3	1
2	P040100002	Honda XR 650 Centre Support	SS304	3	6
3	P040100003	Honda XR 650 Angle Support	SS304	3	2
4	P040100004	Honda XR 650 Foot Support	SS304	3	1
5	P040100005	Honda XR 650 R Foot Peg Base	SS304	3	1
6	P040100006	Honda XR 650 Foot Support 2	SS304	3	1

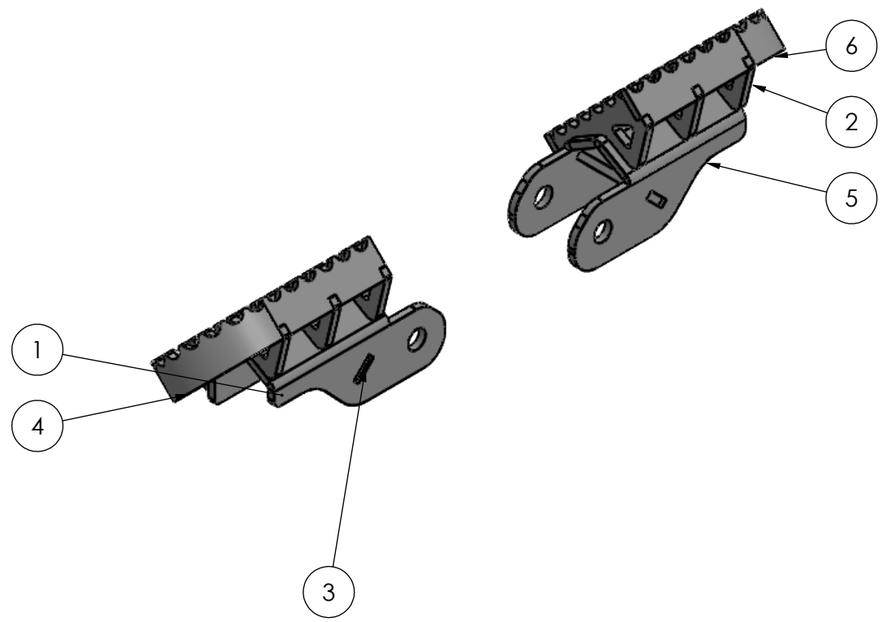

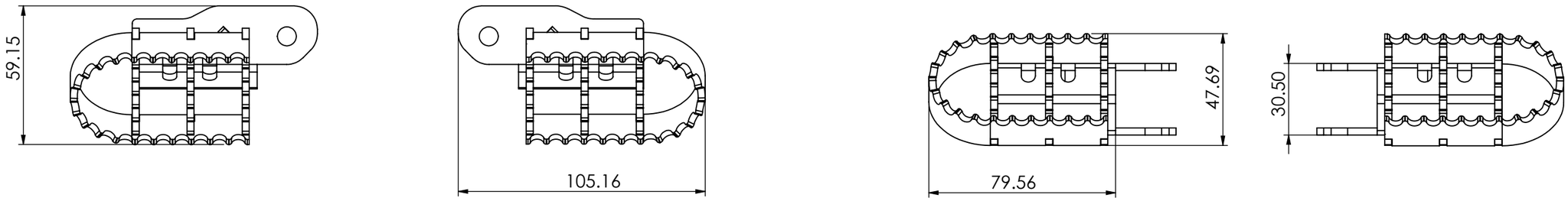

Process needed:
1. Assembly
2. Package

ALL METRIC THREAD TOL: TO 6H (INTERNAL) AND 6g (EXTERNAL) U.O.S
REMOVE ALL SHARP EDGES WHERE APPLICABLE.

MACHINING TOLERANCE		GENERAL TOLERANCE	
ISO 2780-1 U.O.S LINEAR DIMENSIONS CLASS: FINE		ISO 2780-1 U.O.S LINEAR DIMENSIONS CLASS: MEDIUM	
0.5 UP TO 3 ± 0.05	120 UP TO 400 ± 0.2	0.5 UP TO 3 ± 0.1	120 UP TO 400 ± 0.5
3 UP TO 6 ± 0.05	400 UP TO 1000 ± 0.3	3 UP TO 6 ± 0.1	400 UP TO 1000 ± 0.8
6 UP TO 30 ± 0.1	1000 UP TO 2000 ± 0.5	6 UP TO 30 ± 0.2	1000 UP TO 2000 ± 1.2
30 UP TO 120 ± 0.15	2000 UP TO 4000 ± 1.0	30 UP TO 120 ± 0.3	2000 UP TO 4000 ± 2.0
ANGULAR DIMENSIONS		ANGULAR DIMENSIONS	
UP TO 10° ± 1°	120° UP TO 400° ± 0°10'	UP TO 10° ± 1°	120° UP TO 400° ± 0°10'
10° UP TO 50° ± 0°30'	OVER 400° ± 0°5'	10° UP TO 50° ± 0°30'	OVER 400° ± 0°5'
50° UP TO 120° ± 0°20'		50° UP TO 120° ± 0°20'	

REV	Detail of REV	Date:	Name:

	Name:	Date:
DRAWN:		
CHECKED:		
APPROVED:		
MFG:		
QA:		

FILE NAME:	A040100
DESCRIPTION:	Honda XR 650 Wide Foot Pegs
DWG No.	A040100
DATE PRINTED:	18/09/2022
SHEET	1 # 11
REV	E
SURFACE TREATMENT:	

STRAIGHTNESS	CIRCULARITY	PROFILE OF ANY LINE	POSITION	CIRCULAR RUN-OUT	LEAST MATERIAL CONDITION	
FLATNESS	CYLINDRICITY	PROFILE OF ANY SURFACE	CONCENTRICITY	TOTAL RUN-OUT	MAXIMUM MATERIAL CONDITION	
PARALLELISM	PERPENDICULARITY	ANGULARITY	SYMMETRY	ENVELOPE PRINCIPLE	PROJECTED TOLERANCE ZONE	

THIS DRAWING IS THE PROPERTY OF BRIGHTWING TECHNOLOGIES PTY LTD AND MAY NOT BE COPIED OR REPRODUCED IN ANY FORM OR BYANY MEANS WHATSOEVER WITHOUTTHE WRITTEN CONSENT from BRIGHTWING TECHNOLOGIES Pty Ltd ANY INFRINGEMENT OF THIS WARNINGCONSTITUTES THEFT.

3 PROJECTION METHOD: RD ANGLE

SCALE: 1:5

FINISH: MATERIAL:

MOTORRADICAL
Outlast Adventure