ITEM NO.	PART NUMBER	DESCRIPTION	MATERIAL	STOCK SIZE	WEIGHT	VENDOR	QTY.
1	A04037501	AT Man RH Upper Crash Bar	N/A		1800.38		1
2	A04037503	AT Man LH Bottom Crash Bar	N/A		587.17		1
3	A04037504	AT Man RH Bottom Crash Bar	N/A		708.33		1
4	A04037505	AT Man RH Bottom Rear Mount	N/A		146.76		1
5	A04037506	AT Man LH Bottom Rear Mount	N/A		195.50		1
6	P040375001	Front Middle Support Bracket	SS304	6	0.87		1
7	P040375005	Bottom Chassis Mount RH	SS304	4.5	0.38		1
8	P040375006	Bottom Chassis Mount LH	SS304	4.5	0.39		1
9	P040375007	Crash Bar Top Front Mount	SS304	4.5	0.23		1
10	P040375032	MAN RH Bottom Crash Bar Pipe Mount 2	SS304	4.5	0.15		1
11	WFST-D985SS-M08	NUT Hex Nyloc M08 X 1.25mm SS					13
12	WFST-D985SS-M10	NUT Hex Nyloc M10 X 1.50mm SS					1
13	WFST-D6797ASS-M08	Serrated Lock Washer Type J SS - M08					16
14	WFST-D6797ASS-M10	Serrated Lock Washer Type A SS - M10					1
15	WFST-I4762SS-M08x016	Hexagon Socket Head Cap Screw SS-M08x016					5
16	WFST-I4762SS-M08x020	Hexagon Socket Head Cap Screw SS-M08x020					4
17	WFST-I4762SS-M08x025	Hexagon Socket Head Cap Screw SS-M08x025					6
18	WFST-I4762SS-M08x045	Hexagon Socket Head Cap Screw SS-M08x045					1
19	WFST-I4762SS-M08x100	Hexagon Socket Head Cap Screw SS-M08x100					1
20	WFST-I4762SS-M10x110	Hexagon Socket Head Cap Screw SS-M10x110					1
21	WFST-I7089SS-M08	Flat Washer SS - M08 - 16x09.0					21
22	WFST-I7089SS-M10	Flat Washer SS - M10 - 20x11.0					1
23	WPLA-MOU-1380	Pipe End Cap 25.4mm (PE)	N/A		0.00		2
24	WFST-D6797ASS-M08	Serrated Lock Washer Type A SS - M08					1
25	A04037502	AT Man LH Upper Crash Bar					1

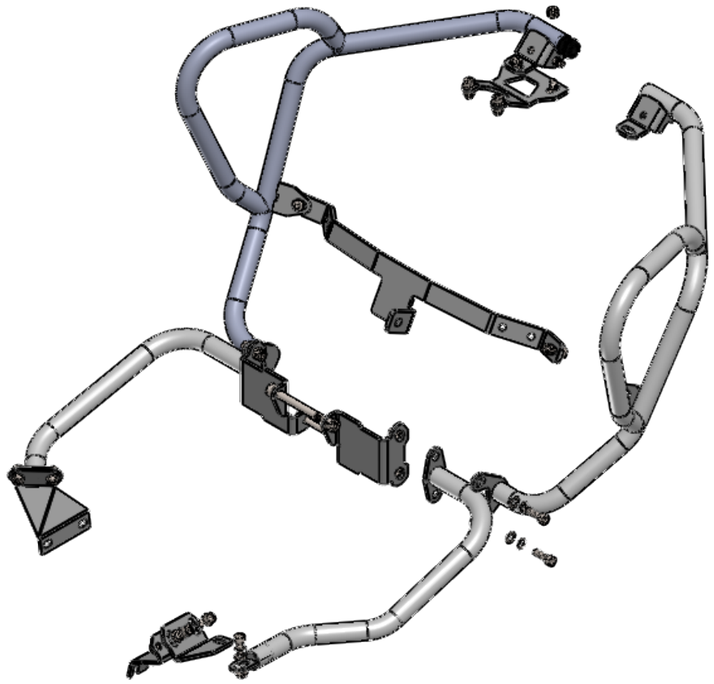

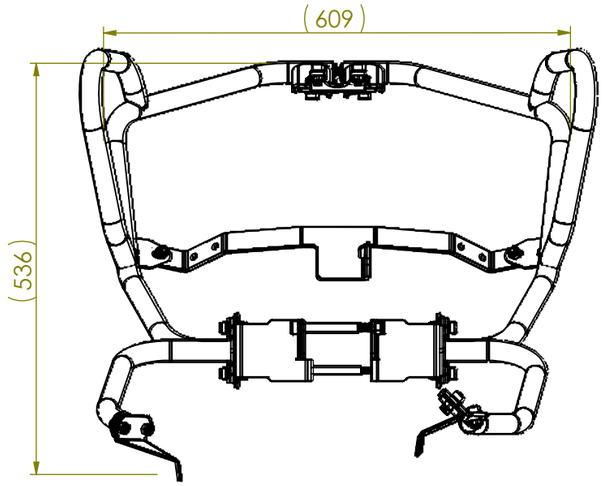

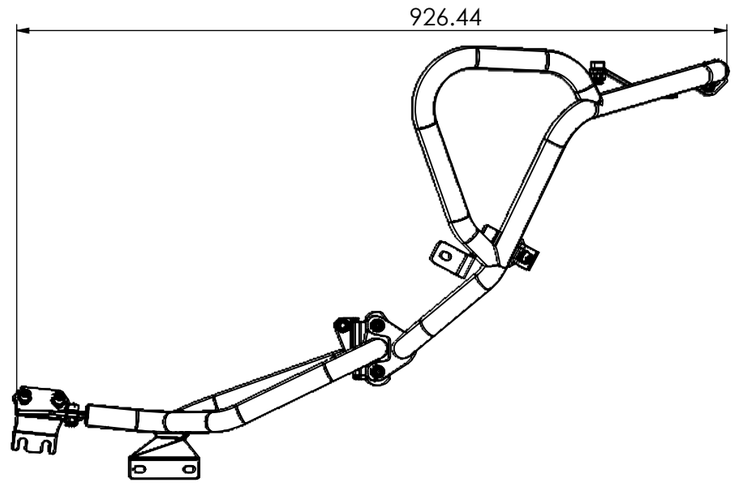

Process needed:

1. Pipe cut off and bend
2. Welding
3. Cleaning (Acid and Shaker)
4. Package

ALL METRIC THREAD TOL: TO 6H (INTERNAL) AND 6g (EXTERNAL) U.O.S
REMOVE ALL SHARP EDGES WHERE APPLICABLE.

MACHINING TOLERANCE		GENERAL TOLERANCE	
ISO 2780-1 U.O.S LINEAR DIMENSIONS CLASS: FINE		ISO 2780-1 U.O.S LINEAR DIMENSIONS CLASS: MEDIUM	
0.5 UP TO 3 ± 0.05	120 UP TO 400 ± 0.2	0.5 UP TO 3 ± 0.1	120 UP TO 400 ± 0.5
3 UP TO 6 ± 0.05	400 UP TO 1000 ± 0.3	3 UP TO 6 ± 0.1	400 UP TO 1000 ± 0.8
6 UP TO 30 ± 0.1	1000 UP TO 2000 ± 0.5	6 UP TO 30 ± 0.2	1000 UP TO 2000 ± 1.2
30 UP TO 120 ± 0.15	2000 UP TO 4000 ± 1.0	30 UP TO 120 ± 0.3	2000 UP TO 4000 ± 2.0
ANGULAR DIMENSIONS		ANGULAR DIMENSIONS	
UP TO 10° ± 1°	120° UP TO 400° ± 0°10'	UP TO 10° ± 1°	120° UP TO 400° ± 0°10'
10° UP TO 50° ± 0°30'	OVER 400° ± 0°5'	10° UP TO 50° ± 0°30'	OVER 400° ± 0°5'
50° UP TO 120° ± 0°20'		50° UP TO 120° ± 0°20'	

STRAIGHTNESS	CIRCULARITY	PROFILE OF ANY LINE	POSITION	CIRCULAR RUN-OUT	LEAST MATERIAL CONDITION
FLATNESS	CYLINDRICITY	PROFILE OF ANY SURFACE	CONCENTRICITY	TOTAL RUN-OUT	MAXIMUM MATERIAL CONDITION
PARALLELISM	PERPENDICULARITY	ANGULARITY	SYMMETRY	ENVELOPE PRINCIPLE	PROJECTED TOLERANCE ZONE

REV	Detail of REV	Date:	Name:

THIS DRAWING IS THE PROPERTY OF BRIGHTWING TECHNOLOGIES PTY LTD AND MAY NOT BE COPIED OR REPRODUCED IN ANY FORM OR BYANY MEANS WHATSOEVER WITHOUTTHE WRITTEN CONSENT from BRIGHTWING TECHNOLOGIES Pty Ltd ANY INFRINGEMENT OF THIS WARNINGCONSTITUTES THEFT.

3 PROJECTION METHOD: RD ANGLE

	Name:	Date:
DRAWN:		
CHECKED:		
APPROVED:		
MFG:		
QA:		

SCALE: 1:5

FINISH:

MATERIAL: N/A

FILE NAME:	A040375
DESCRIPTION:	Africa Twin Manual Crash Bars
DWG No.	A040375
DATE PRINTED	02/10/2023
SHEET	1 # 30
REV	D
SURFACE TREATMENT:	

MOTORRADICAL
Outlast Adventure