ITEM NO.	PART NUMBER	DESCRIPTION	Material	StockSize	QTY.
1	P040705001	Honda NC750 Bash Plate P1	ALU1200H4	4.5	1
2	P040705002	Honda NC750 Bash Plate P2	SS304	3	1
3	P040705004	Honda NC750 Bash Plate P4	SS304	3	1
4	P040705005	Honda NC750 Bash Plate P5	SS304	3	1
5	WFST-D912SS-M08x012	Hexagon Socket Countersunk Head Cap Screw SS -M08x012			2
6	WFST-D912SS-M08x020	Hexagon Socket Countersunk Head Cap Screw SS -M08x020			2
7	WFST-D985SS-M08	NUT Hex Nyloc M08 X 1.25mm SS			3
8	WFST-I4034SS-M08	Hexagon Nut SS - M08			2
9	WFST-I7089SS-M08	Flat Washer SS - M08 - 16x09.0			3
10	WFST-I7380SS-M08x25	Socket Button Head Cap Screw-SS-M08x25			1

Process	Time (Min)
Laser Cut	
Sanding	5
Bending	
Welding TIG	20
Countersinking	10
Powdercoating - Silver Ferrograin-Vx95154	0.2 sqm
Shaking	30
Parts Picking	15
Packaging	10

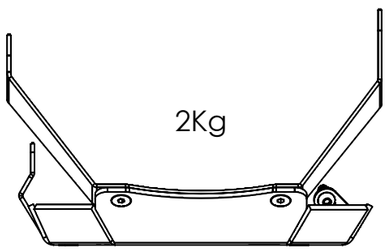

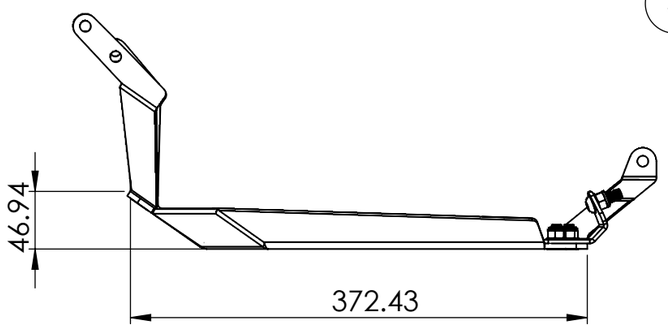

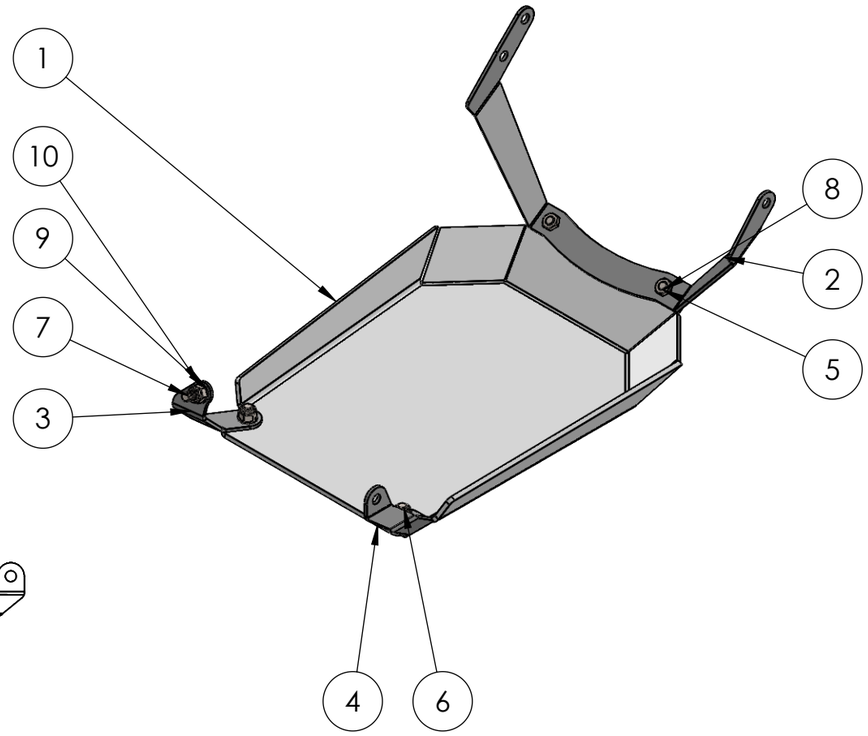

ALL METRIC THREAD TOL: TO 6H (INTERNAL) AND 6g (EXTERNAL) U.O.S
REMOVE ALL SHARP EDGES WHERE APPLICABLE.

MACHINING TOLERANCE		GENERAL TOLERANCE	
ISO 2780-1 U.O.S LINEAR DIMENSIONS CLASS: FINE		ISO 2780-1 U.O.S LINEAR DIMENSIONS CLASS: MEDIUM	
0.5 UP TO 3 ± 0.05	120 UP TO 400 ± 0.2	0.5 UP TO 3 ± 0.1	120 UP TO 400 ± 0.5
3 UP TO 6 ± 0.05	400 UP TO 1000 ± 0.3	3 UP TO 6 ± 0.1	400 UP TO 1000 ± 0.8
6 UP TO 30 ± 0.1	1000 UP TO 2000 ± 0.5	6 UP TO 30 ± 0.2	1000 UP TO 2000 ± 1.2
30 UP TO 120 ± 0.15	2000 UP TO 4000 ± 1.0	30 UP TO 120 ± 0.3	2000 UP TO 4000 ± 2.0
ANGULAR DIMENSIONS		ANGULAR DIMENSIONS	
UP TO 10° ± 1°	120° UP TO 400° ± 0°10'	UP TO 10° ± 1°	120° UP TO 400° ± 0°10'
10° UP TO 50° ± 0°30'	OVER 400° ± 0°5'	10° UP TO 50° ± 0°30'	OVER 400° ± 0°5'
50° UP TO 120° ± 0°20'		50° UP TO 120° ± 0°20'	

STRAIGHTNESS	CIRCULARITY	PROFILE OF ANY LINE	POSITION	CIRCULAR RUN-OUT	LEAST MATERIAL CONDITION
FLATNESS	CYLINDRICITY	PROFILE OF ANY SURFACE	CONCENTRICITY	TOTAL RUN-OUT	MAXIMUM MATERIAL CONDITION
PARALLELISM	PERPENDICULARITY	ANGULARITY	SYMMETRY	ENVELOPE PRINCIPLE	PROJECTED TOLERANCE ZONE

REV	Detail of REV	Date:	Name:		Name:	Signature:	Date:
				DRAWN:			
				CHECKED:			
				APPROVED:			
				MFG:			
				QA:			

THIS DRAWING IS THE PROPERTY OF BRIGHTWING TECHNOLOGIES PTY LTD AND MAY NOT BE COPIED OR REPRODUCED IN ANY FORM OR BYANY MEANS WHATSOEVER WITHOUTTHE WRITTEN CONSENT from BRIGHTWING TECHNOLOGIES Pty Ltd ANY INFRINGEMENT OF THIS WARNINGCONSTITUTES THEFT.

3 PROJECTION METHOD: RD ANGLE

SCALE: 1:5
FINISH:
MATERIAL:

FILE NAME:	A040705
DESCRIPTION:	Honda NC750 Bash Plate
DWG No.	
DATE PRINTED:	25/03/2022
SHEET	1 # 8
REV	B
SURFACE TREATMENT:	

MOTORRADICAL
Outlast Adventure