ITEM NO.	PART NUMBER	DESCRIPTION	MATERIAL	STOCK SIZE	WEIGHT	QTY.
1	BS EN ISO 8734 - 6 x 14 - A - St	Pin, Dowell, 6x12mm - SS	SS			2
2	DIN 912 M10x1.25 x 110 --- 32N	Screw, Allen Cap, M10x110 - MS/ZP	MS/ZP			2
3	P050030001	TIGER 30MM HANDLEBAR RAISER	Alu 6082		0.09	2

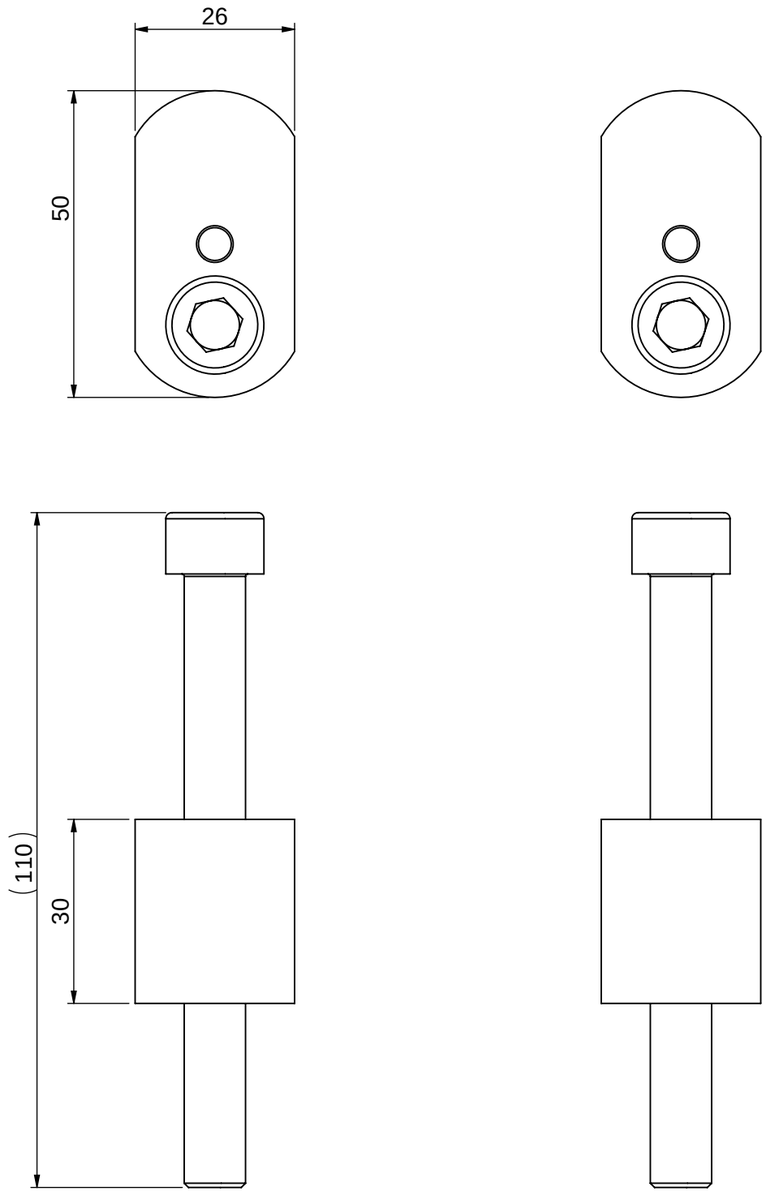

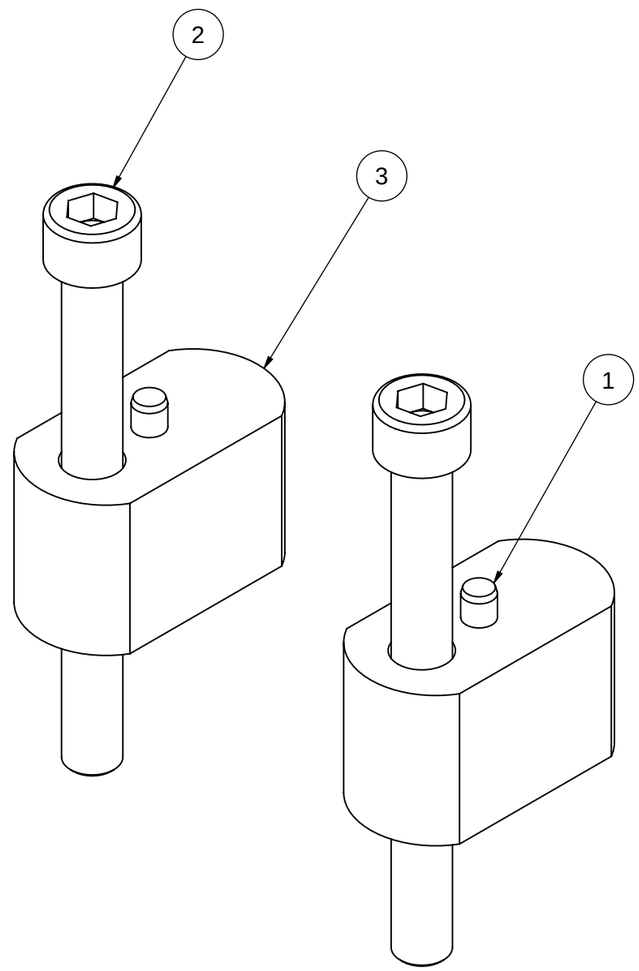

Process needed:
1. Sandblast
2. Assemble
3. Package

ALL METRIC THREAD TOL: TO 6H (INTERNAL) AND 6g (EXTERNAL) U.O.S
REMOVE ALL SHARP EDGES WHERE APPLICABLE.

MACHINING TOLERANCE		GENERAL TOLERANCE	
ISO 2780-1 U.O.S LINEAR DIMENSIONS CLASS: FINE		ISO 2780-1 U.O.S LINEAR DIMENSIONS CLASS: MEDIUM	
0.5 UP TO 3 Ñ 0.05	120 UP TO 400 Ñ 0.2	0.5 UP TO 3 Ñ 0.1	120 UP TO 400 Ñ 0.5
3 UP TO 6 Ñ 0.05	400 UP TO 1000 Ñ 0.3	3 UP TO 6 Ñ 0.1	400 UP TO 1000 Ñ 0.8
6 UP TO 30 Ñ 0.1	1000 UP TO 2000 Ñ 0.5	6 UP TO 30 Ñ 0.2	1000 UP TO 2000 Ñ 1.2
30 UP TO 120 Ñ 0.15	2000 UP TO 4000 Ñ 1.0	30 UP TO 120 Ñ 0.3	2000 UP TO 4000 Ñ 2.0
ANGULAR DIMENSIONS		ANGULAR DIMENSIONS	
UP TO 10Á Ñ 1Á	120Á UP TO 400Á Ñ 0Á10'	UP TO 10Á Ñ 1Á	120Á UP TO 400Á Ñ 0Á10'
10Á UP TO 50Á Ñ 0Á30'	OVER 400Á Ñ 0Á5'	10Á UP TO 50Á Ñ 0Á30'	OVER 400Á Ñ 0Á5'
50Á UP TO 120Á Ñ 0Á20'		50Á UP TO 120Á Ñ 0Á20'	

REV	Detail of REV	Date:	Name:
0A	FIRST RELEASE	2016.07.25	JAD

	Name:	Signature:	Date:
DRAWN:	JAD		
CHECKED:			
APPROVED:	BM		
MFG:			
QA:			

FILE NAME:	A050030
DESCRIPTION:	TIGER 30MM HANDLEBAR RAISER
DWG No.	A050030
DATE PRINTED:	14/11/2017
SHEET	1 # 3
REV	01
SURFACE TREATMENT:	

SCALE: 1:2
FINISH:
MATERIAL: N/A

3 PROJECTION METHOD: RD ANGLE

STRAIGHTNESS, CIRCULARITY, PROFILE OF ANY LINE, POSITION, CIRCULAR RUN-OUT, LEAST MATERIAL CONDITION
FLATNESS, CYLINDRICITY, PROFILE OF ANY SURFACE, CONCENTRICITY, TOTAL RUN-OUT, MAXIMUM MATERIAL CONDITION
PARALLELISM, PERPENDICULARITY, ANGULARITY, SYMMETRY, ENVELOPE PRINCIPLE, PROJECTED TOLERANCE ZONE

THIS DRAWING IS THE PROPERTY OF BRIGHTWING TECHNOLOGIES PTY LTD AND MAY NOT BE COPIED OR REPRODUCED IN ANY FORM OR BYANY MEANS WHATSOEVER WITHOUTTHE WRITTEN CONSENT from BRIGHTWING TECHNOLOGIES Pty Ltd ANY INFRINGEMENT OF THIS WARNINGCONSTITUTES THEFT.

MOTORRADICAL Engineered to Outlast Adventure
BrightWing TECHNOLOGIES