ITEM NO.	PART NUMBER	DESCRIPTION	MATERIAL	STOCK SIZE	QTY.
1	P080080001	KTM 950 R Super Endure Luggage Rack	ALU1200H4	4.5	1
2	WENG-BUS-1475	Alu Spacer, 25xID9xOD16	ALU1200H4	Ï 16.0	4
3	WFST-D912SS-M08x070	Hexagon Socket Countersunk Head Cap Screw SS -M08x070			4

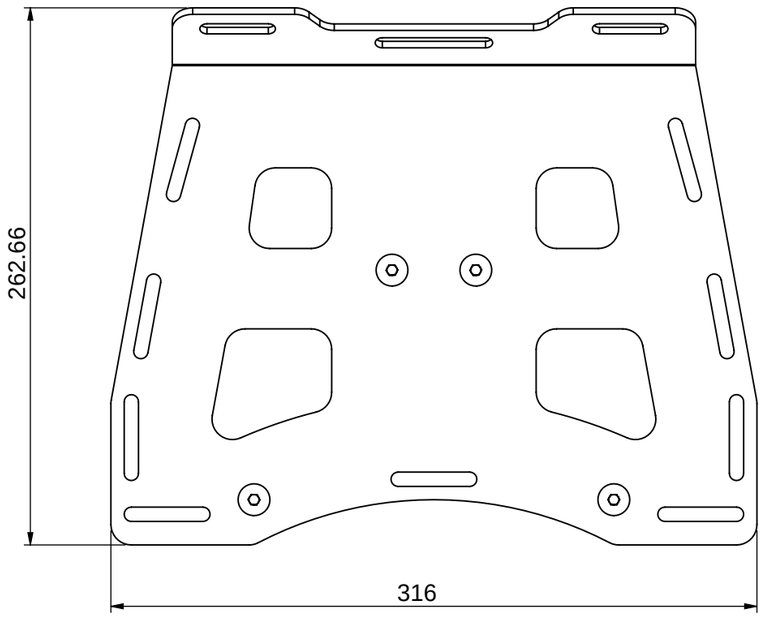

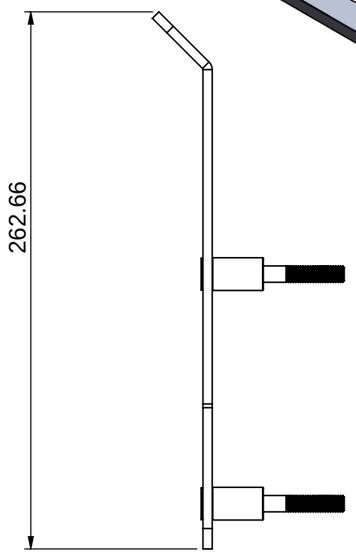

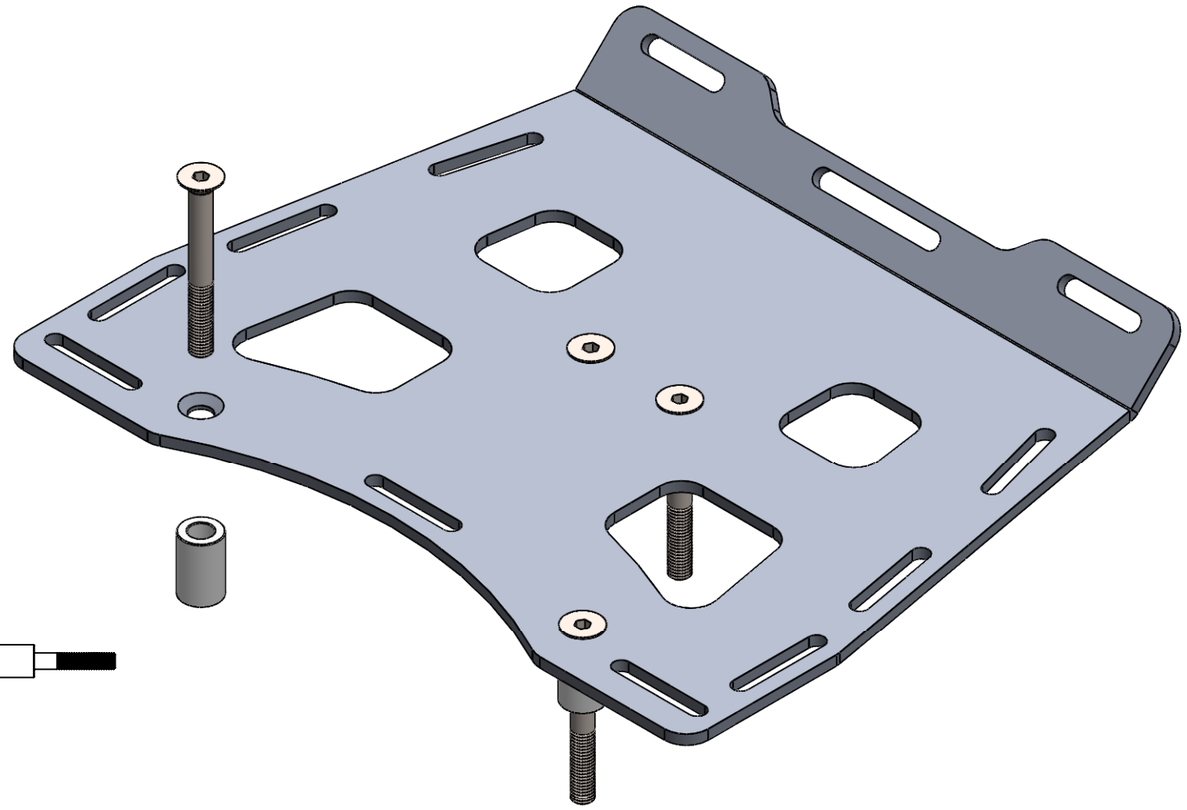

Process Needed:

1. Bend
2. Clean (Deburr)
3. Assemble
4. Package

ALL METRIC THREAD TOL: TO 6H (INTERNAL) AND 6g (EXTERNAL) U.O.S
REMOVE ALL SHARP EDGES WHERE APPLICABLE.

MACHINING TOLERANCE		GENERAL TOLERANCE	
ISO 2780-1 U.O.S LINEAR DIMENSIONS CLASS: FINE		ISO 2780-1 U.O.S LINEAR DIMENSIONS CLASS: MEDIUM	
0.5 UP TO 3 Ñ 0.05	120 UP TO 400 Ñ 0.2	0.5 UP TO 3 Ñ 0.1	120 UP TO 400 Ñ 0.5
3 UP TO 6 Ñ 0.05	400 UP TO 1000 Ñ 0.3	3 UP TO 6 Ñ 0.1	400 UP TO 1000 Ñ 0.8
6 UP TO 30 Ñ 0.1	1000 UP TO 2000 Ñ 0.5	6 UP TO 30 Ñ 0.2	1000 UP TO 2000 Ñ 1.2
30 UP TO 120 Ñ 0.15	2000 UP TO 4000 Ñ 1.0	30 UP TO 120 Ñ 0.3	2000 UP TO 4000 Ñ 2.0
ANGULAR DIMENSIONS		ANGULAR DIMENSIONS	
UP TO 10Á Ñ 1Á	120Á UP TO 400Á Ñ 0Á10'	UP TO 10Á Ñ 1Á	120Á UP TO 400Á Ñ 0Á10'
10Á UP TO 50Á Ñ 0Á30'	OVER 400Á Ñ 0Á5'	10Á UP TO 50Á Ñ 0Á30'	OVER 400Á Ñ 0Á5'
50Á UP TO 120Á Ñ 0Á20'		50Á UP TO 120Á Ñ 0Á20'	

REV	Detail of REV	Date:	Name:

	Name:	Signature:	Date:
DRAWN:			
CHECKED:			
APPROVED:			
MFG:			
QA:			

FILE NAME:	A080080
DESCRIPTION:	KTM 950 R Super Endure Luggage Rack
DWG No.	A080080
DATE PRINTED:	12/11/2018
SHEET	1 # 3
REV	A
SURFACE TREATMENT:	

STRAIGHTNESS	CIRCULARITY	PROFILE OF ANY LINE	POSITION	CIRCULAR RUN-OUT	LEAST MATERIAL CONDITION
FLATNESS	CYLINDRICITY	PROFILE OF ANY SURFACE	CONCENTRICITY	TOTAL RUN-OUT	MAXIMUM MATERIAL CONDITION
PARALLELISM	PERPENDICULARITY	ANGULARITY	SYMMETRY	ENVELOPE PRINCIPLE	PROJECTED TOLERANCE ZONE

THIS DRAWING IS THE PROPERTY OF BRIGHTWING TECHNOLOGIES PTY LTD AND MAY NOT BE COPIED OR REPRODUCED IN ANY FORM OR BYANY MEANS WHATSOEVER WITHOUTTHE WRITTEN CONSENT from BRIGHTWING TECHNOLOGIES Pty Ltd ANY INFRINGEMENT OF THIS WARNINGCONSTITUTES THEFT.

3 PROJECTION METHOD: RD ANGLE

SCALE: 1:5

FINISH:

MATERIAL:

MOTORRADICAL Engineered to Outlast Adventure

BrightWing TECHNOLOGIES