| ITEM NO. | PART NUMBER | DESCRIPTION | MATERIAL | STOCK SIZE | QTY. |
|---|---|---|---|---|---|
| 1 | P080100001 | Pillion foot peg arch R | SS304 | 3 | 1 |
| 2 | P080100002 | Pillion wide foot peg R Base | SS304 | 3 | 1 |
| 3 | P080100003 | Pillion Foot Peg Centre Support | SS304 | 3 | 6 |
| 4 | P080100004 | Pillion wide foot peg L Base | SS304 | 3 | 1 |
| 5 | P080100005 | Pillion foot peg arch L | SS304 | 3 | 1 |

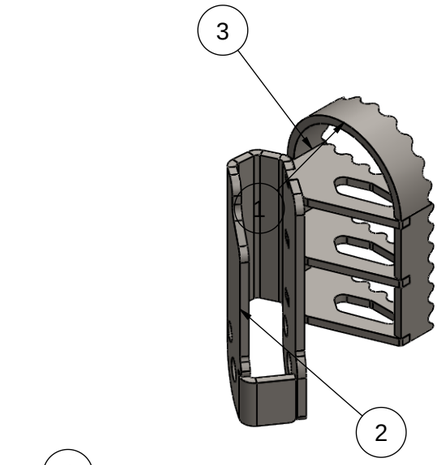


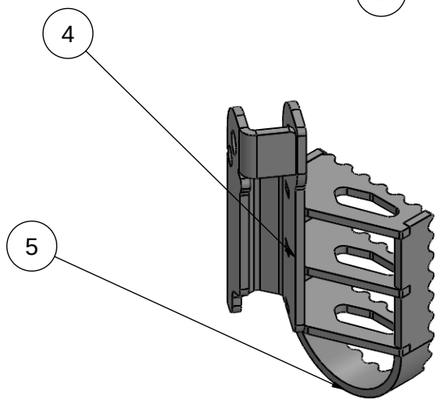


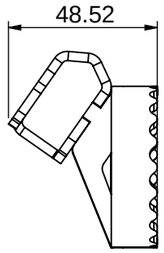


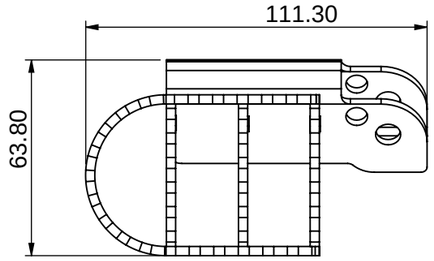


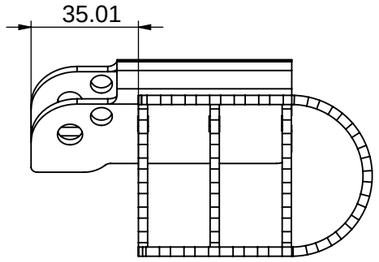


Process needed:
1. Assembly
2. Package

ALL METRIC THREAD TOL: TO 6H (INTERNAL) AND 6g (EXTERNAL) U.O.S
REMOVE ALL SHARP EDGES WHERE APPLICABLE.

| MACHINING TOLERANCE | | GENERAL TOLERANCE | |
|---|---|---|---|
| ISO 2780-1 U.O.S LINEAR DIMENSIONS CLASS: FINE | | ISO 2780-1 U.O.S LINEAR DIMENSIONS CLASS: MEDIUM | |
| 0.5 UP TO 3 Ñ 0.05 | 120 UP TO 400 Ñ 0.2 | 0.5 UP TO 3 Ñ 0.1 | 120 UP TO 400 Ñ 0.5 |
| 3 UP TO 6 Ñ 0.05 | 400 UP TO 1000 Ñ 0.3 | 3 UP TO 6 Ñ 0.1 | 400 UP TO 1000 Ñ 0.8 |
| 6 UP TO 30 Ñ 0.1 | 1000 UP TO 2000 Ñ 0.5 | 6 UP TO 30 Ñ 0.2 | 1000 UP TO 2000 Ñ 1.2 |
| 30 UP TO 120 Ñ 0.15 | 2000 UP TO 4000 Ñ 1.0 | 30 UP TO 120 Ñ 0.3 | 2000 UP TO 4000 Ñ 2.0 |
| ANGULAR DIMENSIONS | | ANGULAR DIMENSIONS | |
| UP TO 10Á Ñ 1Á | 120Á UP TO 400Á Ñ 0Á10' | UP TO 10Á Ñ 1Á | 120Á UP TO 400Á Ñ 0Á10' |
| 10Á UP TO 50Á Ñ 0Á30' | OVER 400Á Ñ 0Á5' | 10Á UP TO 50Á Ñ 0Á30' | OVER 400Á Ñ 0Á5' |
| 50Á UP TO 120Á Ñ 0Á20' | | 50Á UP TO 120Á Ñ 0Á20' | |

| | | | | | | |
|---|---|---|---|---|---|---|
| STRAIGHTNESS | CIRCULARITY | PROFILE OF ANY LINE | POSITION | CIRCULAR RUN-OUT | LEAST MATERIAL CONDITION |
| FLATNESS | CYLINDRICITY | PROFILE OF ANY SURFACE | CONCENTRICITY | TOTAL RUN-OUT | MAXIMUM MATERIAL CONDITION |
| PARALLELISM | PERPENDICULARITY | ANGULARITY | SYMMETRY | ENVELOPE PRINCIPLE | PROJECTED TOLERANCE ZONE |

| REV | Detail of REV | Date: | Name: |
|---|---|---|---|
| | | | |
| | | | |
| | | | |
| | | | |
| | | | |
| | | | |
| | | | |

| | Name: | Signature: | Date: |
|---|---|---|---|
| DRAWN: | | | |
| CHECKED: | | | |
| APPROVED: | | | |
| MFG: | | | |
| QA: | | | |

| | |
|---|---|
| FILE NAME: | A080100 |
| DESCRIPTION: | KTM Pillion Foot Pegs |
| DWG No. | A080100 |
| DATE PRINTED: | 01/11/2018 |
| SHEET | 1 # 10 |
| REV | A |
| SURFACE TREATMENT: | |

THIS DRAWING IS THE PROPERTY OF BRIGHTWING TECHNOLOGIES PTY LTD AND MAY NOT BE COPIED OR REPRODUCED IN ANY FORM OR BYANY MEANS WHATSOEVER WITHOUTTHE WRITTEN CONSENT from BRIGHTWING TECHNOLOGIES Pty Ltd ANY INFRINGEMENT OF THIS WARNINGCONSTITUTES THEFT.

3 PROJECTION METHOD: RD ANGLE

SCALE: 1:5
FINISH:
MATERIAL:

MOTORRADICAL Engineered to Outlast Adventure
BrightWing TECHNOLOGIES