ITEM NO.	PART NUMBER	DESCRIPTION	MATERIAL	QTY.
1	P080365001	Main Plate	SS304	1
2	P080365002W	KTM 1190 Top Box Bracket Pipe	SS Tubing	1
3	P080365003	Pipe End Cap	SS304	2
4	WFST-I4762SS-M08x055	Hexagon Socket Head Cap Screw SS-M08x055		2
5	WFST-I4762SS-M08x070	Hexagon Socket Head Cap Screw SS-M08x070		2
6	WENG-BUS-2050	Spacer 20L x 8.5ID x 14OD	ALU	2
7	WENG-BUS-2065	Spacer 15L x 8.5ID x 14OD	ALU	2
8	WFST-I7089SS-M08	Flat Washer SS - M08 - 16x09.0		4

Process	Time (Min)
Laser Cut	
Bending	
Tube Cut & Bend	15
Welding CO2	15
Welding TIG	10
Sand Blasting	15
Parts Picking	5
Assembly	5
Packaging	10

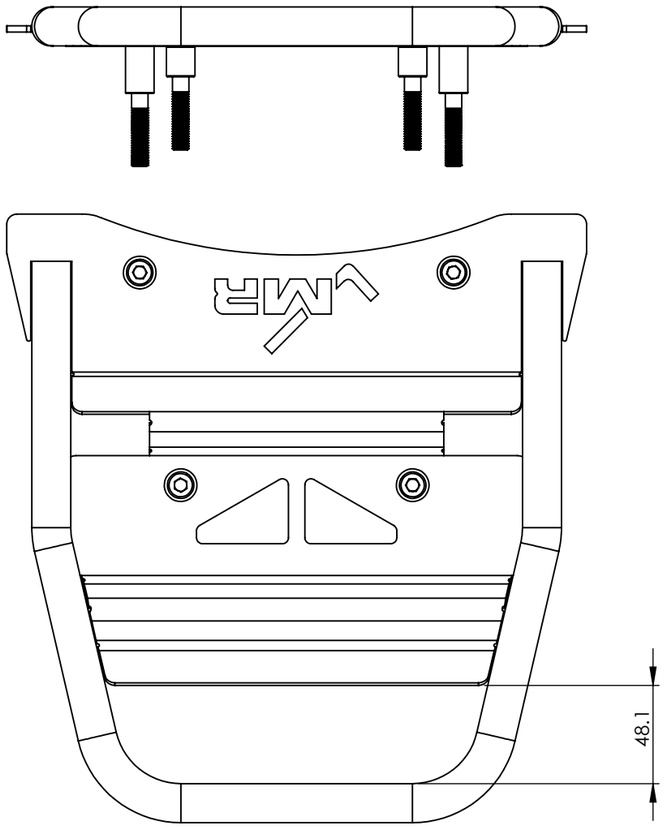

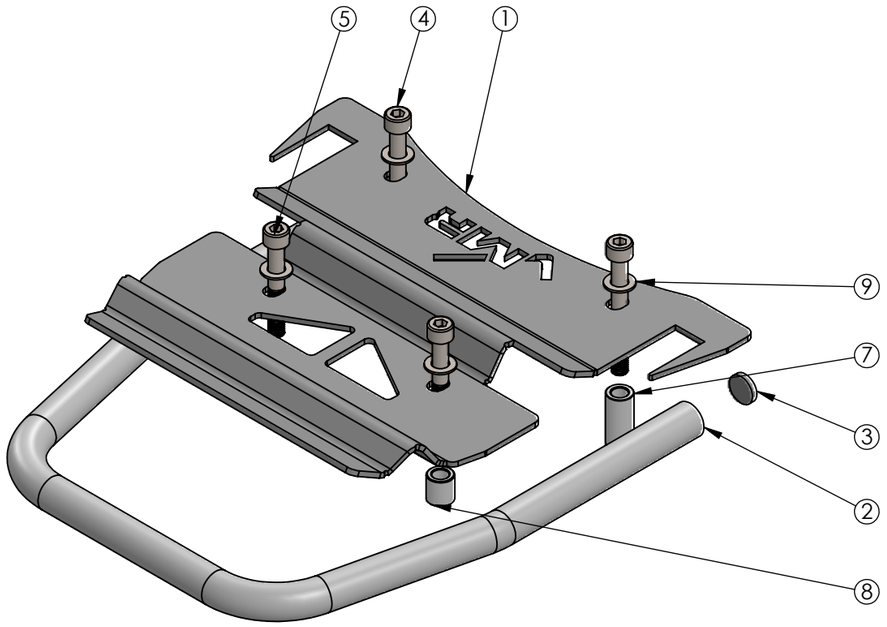

ALL METRIC THREAD TOL: TO 6H (INTERNAL) AND 6g (EXTERNAL) U.O.S
REMOVE ALL SHARP EDGES WHERE APPLICABLE.

MACHINING TOLERANCE		GENERAL TOLERANCE	
ISO 2780-1 U.O.S LINEAR DIMENSIONS CLASS: FINE		ISO 2780-1 U.O.S LINEAR DIMENSIONS CLASS: MEDIUM	
0.5 UP TO 3 ± 0.05	120 UP TO 400 ± 0.2	0.5 UP TO 3 ± 0.1	120 UP TO 400 ± 0.5
3 UP TO 6 ± 0.05	400 UP TO 1000 ± 0.3	3 UP TO 6 ± 0.1	400 UP TO 1000 ± 0.8
6 UP TO 30 ± 0.1	1000 UP TO 2000 ± 0.5	6 UP TO 30 ± 0.2	1000 UP TO 2000 ± 1.2
30 UP TO 120 ± 0.15	2000 UP TO 4000 ± 1.0	30 UP TO 120 ± 0.3	2000 UP TO 4000 ± 2.0
ANGULAR DIMENSIONS		ANGULAR DIMENSIONS	
UP TO 10° ± 1°	120° UP TO 400° ± 0°10'	UP TO 10° ± 1°	120° UP TO 400° ± 0°10'
10° UP TO 50° ± 0°30'	OVER 400° ± 0°5'	10° UP TO 50° ± 0°30'	OVER 400° ± 0°5'
50° UP TO 120° ± 0°20'		50° UP TO 120° ± 0°20'	

STRAIGHTNESS	CIRCULARITY	PROFILE OF ANY LINE	POSITION	CIRCULAR RUN-OUT
FLATNESS	CYLINDRICITY	PROFILE OF ANY SURFACE	CONCENTRICITY	TOTAL RUN-OUT
PARALLELISM	PERPENDICULARITY	ANGULARITY	SYMMETRY	ENVELOPE PRINCIPLE

LEAST MATERIAL CONDITION
MAXIMUM MATERIAL CONDITION
PROJECTED TOLERANCE ZONE

REV	Detail of REV	Date:	Name:

THIS DRAWING IS THE PROPERTY OF BRIGHTWING TECHNOLOGIES PTY LTD AND MAY NOT BE COPIED OR REPRODUCED IN ANY FORM OR BYANY MEANS WHATSOEVER WITHOUTTHE WRITTEN CONSENT from BRIGHTWING TECHNOLOGIES Pty Ltd ANY INFRINGEMENT OF THIS WARNINGCONSTITUTES THEFT.

3 PROJECTION METHOD: RD ANGLE

	Name:	Signature:	Date:
DRAWN:			
CHECKED:			
APPROVED:			
MFG:			
QA:			

SCALE: 1:5
FINISH:
MATERIAL:

FILE NAME:	A080365
DESCRIPTION:	
DWG No.	
DATE PRINTED:	18/05/2022
SHEET	1 # 5
REV	A
SURFACE TREATMENT:	

MOTORRADICAL
Outlast Adventure