| ITEM NO. | PART NUMBER | DESCRIPTION | MATERIAL | STOCK SIZE | WEIGHT | QTY. |
|---|---|---|---|---|---|---|
| 1 | A09007001 | ALL GS Model LH Foot Peg | N/A | | 221.94 | 1 |
| 2 | A09007002 | ALL GS Model RH Foot Peg | N/A | | 221.39 | 1 |
| 3 | A010450 | Foot Peg Replacemnet Spring | | | | 2 |

Process needed:

- Laser cut
- Bend
- Weld
- Clean (Acid and Shaker)
- Package

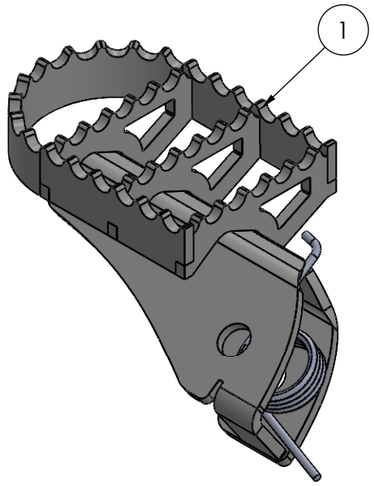


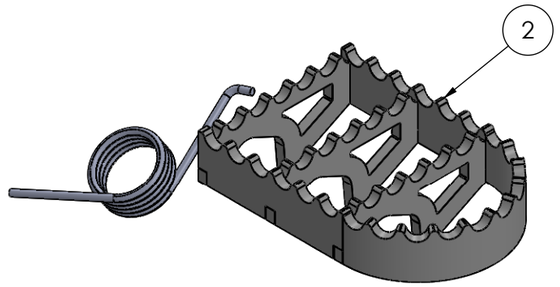


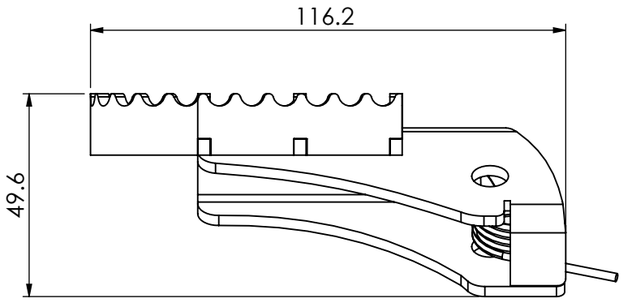


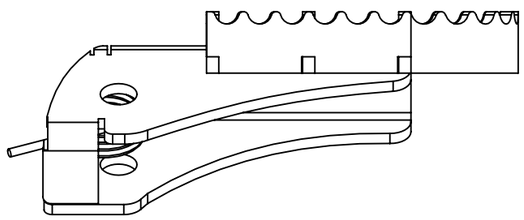

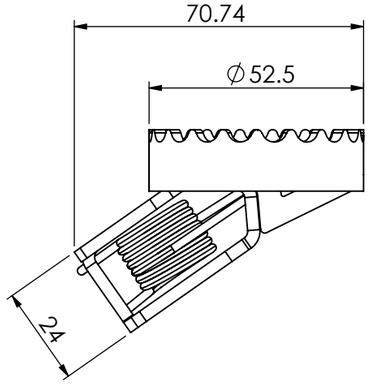


ALL METRIC THREAD TOL: TO 6H (INTERNAL) AND 6g (EXTERNAL) U.O.S
REMOVE ALL SHARP EDGES WHERE APPLICABLE.

| MACHINING TOLERANCE | | GENERAL TOLERANCE | |
|---|---|---|---|
| ISO 2780-1 U.O.S LINEAR DIMENSIONS CLASS: FINE | | ISO 2780-1 U.O.S LINEAR DIMENSIONS CLASS: MEDIUM | |
| 0.5 UP TO 3 ± 0.05 | 120 UP TO 400 ± 0.2 | 0.5 UP TO 3 ± 0.1 | 120 UP TO 400 ± 0.5 |
| 3 UP TO 6 ± 0.05 | 400 UP TO 1000 ± 0.3 | 3 UP TO 6 ± 0.1 | 400 UP TO 1000 ± 0.8 |
| 6 UP TO 30 ± 0.1 | 1000 UP TO 2000 ± 0.5 | 6 UP TO 30 ± 0.2 | 1000 UP TO 2000 ± 1.2 |
| 30 UP TO 120 ± 0.15 | 2000 UP TO 4000 ± 1.0 | 30 UP TO 120 ± 0.3 | 2000 UP TO 4000 ± 2.0 |
| ANGULAR DIMENSIONS | | ANGULAR DIMENSIONS | |
| UP TO 10° ± 1° | 120° UP TO 400° ± 0°10' | UP TO 10° ± 1° | 120° UP TO 400° ± 0°10' |
| 10° UP TO 50° ± 0°30' | OVER 400° ± 0°5' | 10° UP TO 50° ± 0°30' | OVER 400° ± 0°5' |
| 50° UP TO 120° ± 0°20' | | 50° UP TO 120° ± 0°20' | |

| | | | | | |
|---|---|---|---|---|---|
| STRAIGHTNESS | CIRCULARITY | PROFILE OF ANY LINE | POSITION | CIRCULAR RUN-OUT | LEAST MATERIAL CONDITION |
| FLATNESS | CYLINDRICITY | PROFILE OF ANY SURFACE | CONCENTRICITY | TOTAL RUN-OUT | MAXIMUM MATERIAL CONDITION |
| PARALLELISM | PERPENDICULARITY | ANGULARITY | SYMMETRY | ENVELOPE PRINCIPLE | PROJECTED TOLERANCE ZONE |

| REV | Detail of REV | Date: | Name: |
|---|---|---|---|
| | | | |

| | Name: | Signature: | Date: |
|---|---|---|---|
| DRAWN: | | | |
| CHECKED: | | | |
| APPROVED: | | | |
| MFG: | | | |
| QA: | | | |

| | |
|---|---|
| FILE NAME: | A090070 |
| DESCRIPTION: | ALL GS Model Foot Peg Assy |
| DWG No. | A090070 |
| DATE PRINTED | 03/12/2020 |
| SHEET | 1 # 7 |
| REV | B |
| SURFACE TREATMENT: | |

THIS DRAWING IS THE PROPERTY OF BRIGHTWING TECHNOLOGIES PTY LTD AND MAY NOT BE COPIED OR REPRODUCED IN ANY FORM OR BYANY MEANS WHATSOEVER WITHOUTTHE WRITTEN CONSENT from BRIGHTWING TECHNOLOGIES Pty Ltd ANY INFRINGEMENT OF THIS WARNINGCONSTITUTES THEFT.

3 PROJECTION METHOD: RD ANGLE

SCALE: 1:2

FINISH:

MATERIAL: N/A

MOTORRADICAL
Outlast Adventure