ITEM NO.	PART NUMBER	DESCRIPTION	MATERIAL	STOCK SIZE	QTY.
1	P090247001	F800 Side Stand Extender Top	SS304	2	1
2	P090247002	F800 Side Stand Extender Middle	ALU1200H4	3	1
3	P090247003	F800 Side Stand Extender Bottom	SS304	3	1
4	WFST-D912SS-M06x016	Hexagon Socket Countersunk Head Cap Screw SS -M06x016			3
5	DIN 1587 - M6 --NNU				3

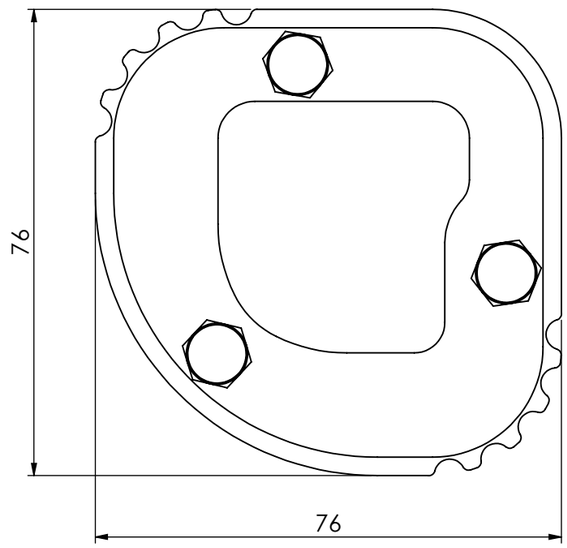

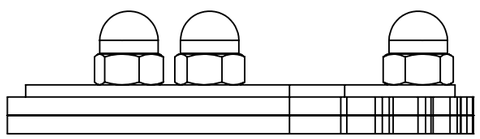

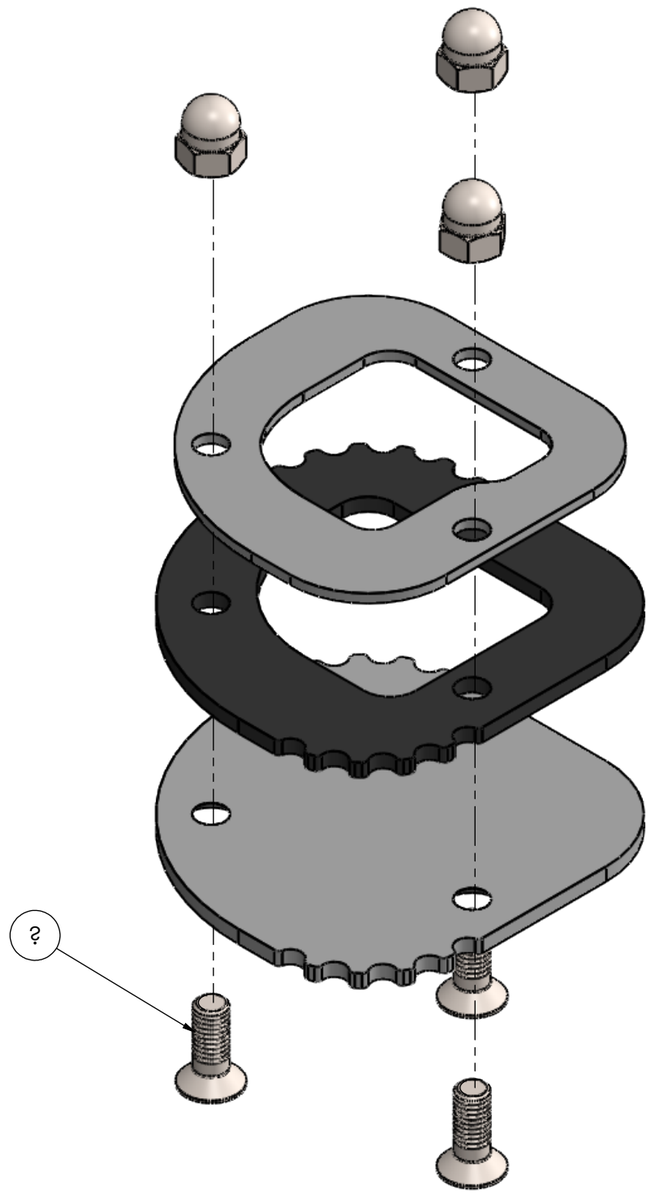

Process	Time (Min)
Laser Cut	
Countersinking	
Sanding	10
Shaking	10
Powdercoating - P0900110002 Black Ferrograin-Vx8503	
Parts Picking	5
Assembly	5
Packaging	10

ALL METRIC THREAD TOL: TO 6H (INTERNAL) AND 6g (EXTERNAL) U.O.S
REMOVE ALL SHARP EDGES WHERE APPLICABLE.

MACHINING TOLERANCE		GENERAL TOLERANCE	
ISO 2780-1 U.O.S LINEAR DIMENSIONS CLASS: FINE		ISO 2780-1 U.O.S LINEAR DIMENSIONS CLASS: MEDIUM	
0.5 UP TO 3 ± 0.05	120 UP TO 400 ± 0.2	0.5 UP TO 3 ± 0.1	120 UP TO 400 ± 0.5
3 UP TO 6 ± 0.05	400 UP TO 1000 ± 0.3	3 UP TO 6 ± 0.1	400 UP TO 1000 ± 0.8
6 UP TO 30 ± 0.1	1000 UP TO 2000 ± 0.5	6 UP TO 30 ± 0.2	1000 UP TO 2000 ± 1.2
30 UP TO 120 ± 0.15	2000 UP TO 4000 ± 1.0	30 UP TO 120 ± 0.3	2000 UP TO 4000 ± 2.0
ANGULAR DIMENSIONS		ANGULAR DIMENSIONS	
UP TO 10° ± 1°	120° UP TO 400° ± 0°10'	UP TO 10° ± 1°	120° UP TO 400° ± 0°10'
10° UP TO 50° ± 0°30'	OVER 400° ± 0°5'	10° UP TO 50° ± 0°30'	OVER 400° ± 0°5'
50° UP TO 120° ± 0°20'		50° UP TO 120° ± 0°20'	

STRAIGHTNESS	CIRCULARITY	PROFILE OF ANY LINE	POSITION	CIRCULAR RUN-OUT	LEAST MATERIAL CONDITION	
FLATNESS	CYLINDRICITY	PROFILE OF ANY SURFACE	CONCENTRICITY	TOTAL RUN-OUT	MAXIMUM MATERIAL CONDITION	
PARALLELISM	PERPENDICULARITY	ANGULARITY	SYMMETRY	ENVELOPE PRINCIPLE	PROJECTED TOLERANCE ZONE	

REV	Detail of REV	Date:	Name:

THIS DRAWING IS THE PROPERTY OF BRIGHTWING TECHNOLOGIES PTY LTD AND MAY NOT BE COPIED OR REPRODUCED IN ANY FORM OR BYANY MEANS WHATSOEVER WITHOUTTHE WRITTEN CONSENT from BRIGHTWING TECHNOLOGIES Pty Ltd ANY INFRINGEMENT OF THIS WARNINGCONSTITUTES THEFT.

3 PROJECTION METHOD: RD ANGLE

	Name:	Signature:	Date:
DRAWN:			
CHECKED:			
APPROVED:			
MFG:			
QA:			

SCALE: 1:1

FINISH:

MATERIAL: N/A

FILE NAME:	A090247
DESCRIPTION:	F800 Wide Side Stand Extender
DWG No.	A090247
DATE PRINTED	08/04/2024
SHEET	1 # 5
REV	A
SURFACE TREATMENT:	

MOTORRADICAL
Outlast Adventure