| ITEM NO. | PART NUMBER | DESCRIPTION | MATERIAL | STOCK SIZE | WEIGHT | QTY. |
|---|---|---|---|---|---|---|
| 1 | P090423001 | R1200 Rear Brake Reservoir Protector | ALU1200H4 | 3 | 41.86 | 1 |

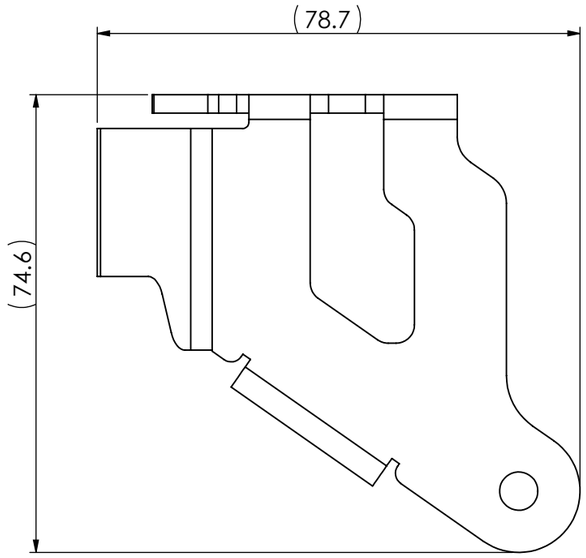


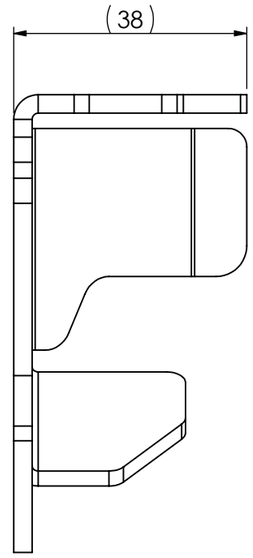


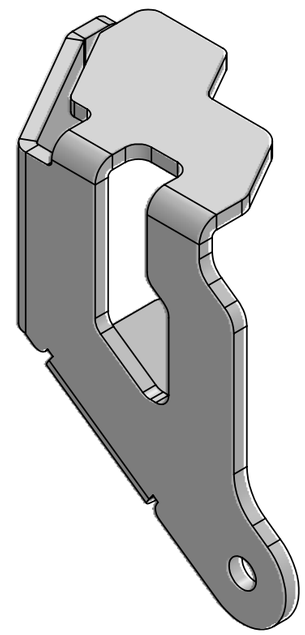

| Process | Time (Min) |
|---|---|
| Laser Cut | |
| sanding | 10 |
| Deburring | 10 |
| Bending | |
| Powdercoating - P060695001 Black Ferrograin-Vx8503 | |
| Packaging | 10 |

ALL METRIC THREAD TOL: TO 6H (INTERNAL) AND 6g (EXTERNAL) U.O.S
REMOVE ALL SHARP EDGES WHERE APPLICABLE.

| MACHINING TOLERANCE | | GENERAL TOLERANCE | |
|---|---|---|---|
| ISO 2780-1 U.O.S LINEAR DIMENSIONS CLASS: FINE | | ISO 2780-1 U.O.S LINEAR DIMENSIONS CLASS: MEDIUM | |
| 0.5 UP TO 3 ± 0.05 | 120 UP TO 400 ± 0.2 | 0.5 UP TO 3 ± 0.1 | 120 UP TO 400 ± 0.5 |
| 3 UP TO 6 ± 0.05 | 400 UP TO 1000 ± 0.3 | 3 UP TO 6 ± 0.1 | 400 UP TO 1000 ± 0.8 |
| 6 UP TO 30 ± 0.1 | 1000 UP TO 2000 ± 0.5 | 6 UP TO 30 ± 0.2 | 1000 UP TO 2000 ± 1.2 |
| 30 UP TO 120 ± 0.15 | 2000 UP TO 4000 ± 1.0 | 30 UP TO 120 ± 0.3 | 2000 UP TO 4000 ± 2.0 |
| ANGULAR DIMENSIONS | | ANGULAR DIMENSIONS | |
| UP TO 10° ± 1° | 120° UP TO 400° ± 0°10' | UP TO 10° ± 1° | 120° UP TO 400° ± 0°10' |
| 10° UP TO 50° ± 0°30' | OVER 400° ± 0°5' | 10° UP TO 50° ± 0°30' | OVER 400° ± 0°5' |
| 50° UP TO 120° ± 0°20' | | 50° UP TO 120° ± 0°20' | |

| | | | | |
|---|---|---|---|---|
| STRAIGHTNESS | CIRCULARITY | PROFILE OF ANY LINE | POSITION | CIRCULAR RUN-OUT |
| FLATNESS | CYLINDRICITY | PROFILE OF ANY SURFACE | CONCENTRICITY | TOTAL RUN-OUT |
| PARALLELISM | PERPENDICULARITY | ANGULARITY | SYMMETRY | ENVELOPE PRINCIPLE |

LEAST MATERIAL CONDITION
MAXIMUM MATERIAL CONDITION
PROJECTED TOLERANCE ZONE

| REV | Detail of REV | Date: | Name: |
|---|---|---|---|
| | | | |

THIS DRAWING IS THE PROPERTY OF BRIGHTWING TECHNOLOGIES PTY LTD AND MAY NOT BE COPIED OR REPRODUCED IN ANY FORM OR BYANY MEANS WHATSOEVER WITHOUTTHE WRITTEN CONSENT from BRIGHTWING TECHNOLOGIES Pty Ltd ANY INFRINGEMENT OF THIS WARNINGCONSTITUTES THEFT.

3 PROJECTION METHOD: RD ANGLE

| | Name: | Signature: | Date: |
|---|---|---|---|
| DRAWN: | | | |
| CHECKED: | | | |
| APPROVED: | | | |
| MFG: | | | |
| QA: | | | |

SCALE: 1:1
FINISH: PC Satin Black
MATERIAL: N/A

| | |
|---|---|
| FILE NAME: | A090425 |
| DESCRIPTION: | R1200GS&A K50 K51 Rear Brake Res Prot |
| DWG No. | A090425 |
| DATE PRINTED | 30/04/2024 |
| SHEET | 1 # 3 |
| REV | C |
| SURFACE TREATMENT: | |

MOTORRADICAL
Outlast Adventure