ITEM NO.	PART NUMBER	DESCRIPTION	MATERIAL	StockSize	QTY.
1	P090615001	1300GS Top Box Bracket Main Plate	SS304	3.0	1
2	P090615002W	1300GS Top Box Bracket Pipe	SS Tubing	Ø19.1x1.5	1
3	WPLA-MOU-1175	Pipe End Cap 19mm (PE)	N/A		2
4	WENG-BUS-2055	Spacer 8L x 6.5ID x 10OD	Aluminium		4
5	WFST-I4762SS-M06x025	Hexagon Socket Head Cap Screw SS-M06x025			4
6	WFST-I7089SS-M06	Flat Washer SS - M06 - 12x06.6			4

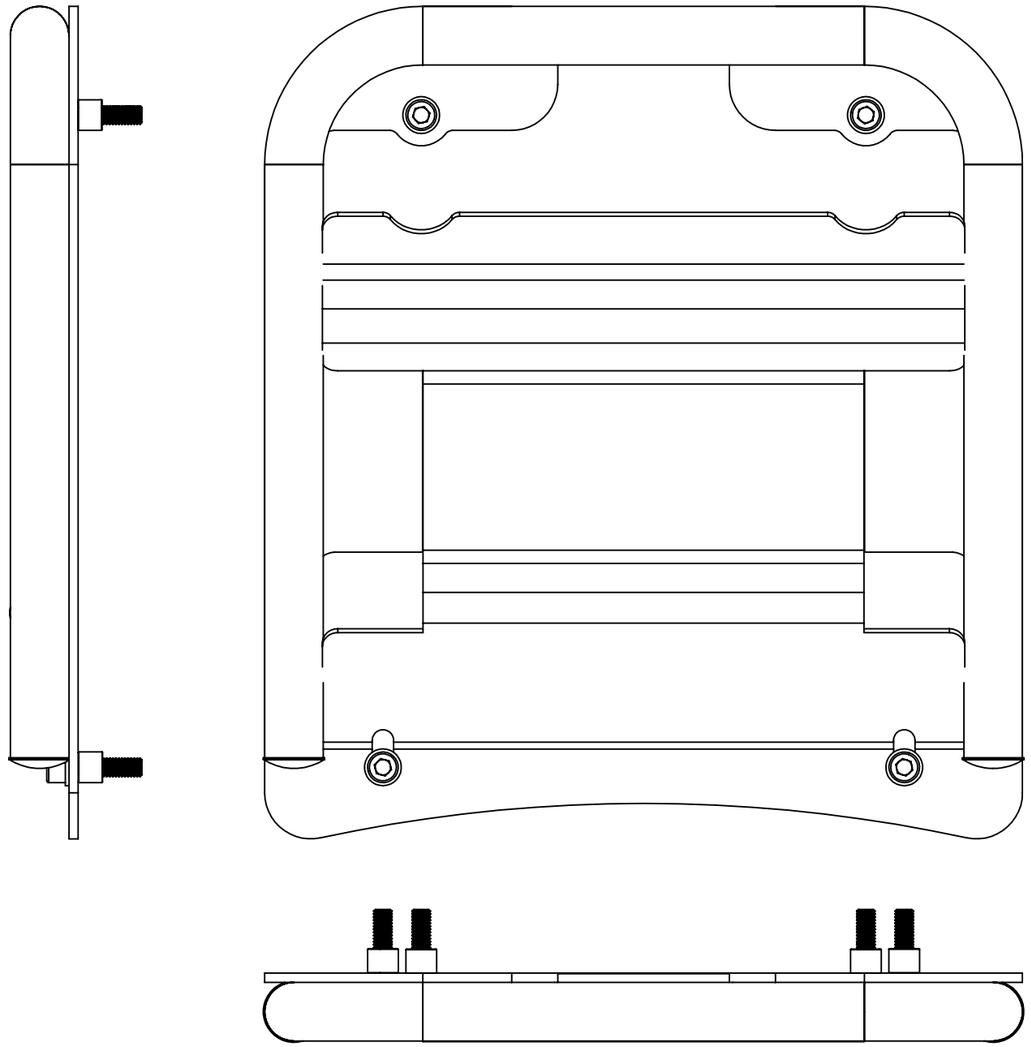

LASERCUTTING	AS PER LIST
TUBE CUTTING	10min
TUBE BENDING	15min
WELDING - CO2	15min
ACID TREATMENT	15min
GRINDING	10min
SAND BLASTING	15min

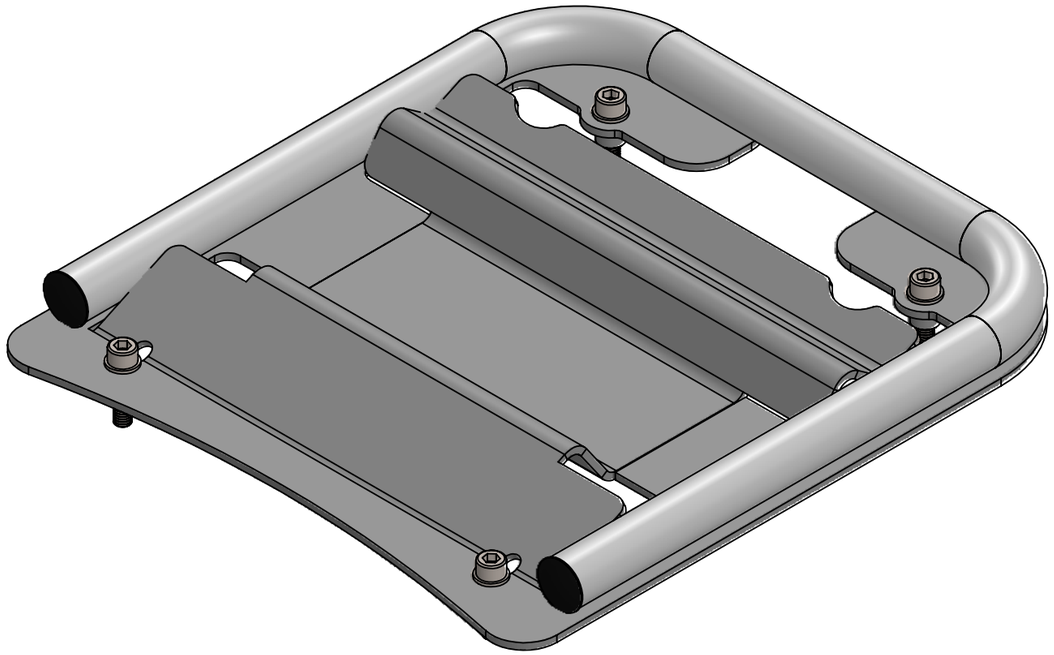

ALL METRIC THREAD TOL: TO 6H (INTERNAL) AND 6g (EXTERNAL) U.O.S
REMOVE ALL SHARP EDGES WHERE APPLICABLE.

MACHINING TOLERANCE		GENERAL TOLERANCE	
ISO 2780-1 U.O.S LINEAR DIMENSIONS CLASS: FINE		ISO 2780-1 U.O.S LINEAR DIMENSIONS CLASS: MEDIUM	
0.5 UP TO 3 ± 0.05	120 UP TO 400 ± 0.2	0.5 UP TO 3 ± 0.1	120 UP TO 400 ± 0.5
3 UP TO 6 ± 0.05	400 UP TO 1000 ± 0.3	3 UP TO 6 ± 0.1	400 UP TO 1000 ± 0.8
6 UP TO 30 ± 0.1	1000 UP TO 2000 ± 0.5	6 UP TO 30 ± 0.2	1000 UP TO 2000 ± 1.2
30 UP TO 120 ± 0.15	2000 UP TO 4000 ± 1.0	30 UP TO 120 ± 0.3	2000 UP TO 4000 ± 2.0
ANGULAR DIMENSIONS		ANGULAR DIMENSIONS	
UP TO 10° ± 1°	120° UP TO 400° ± 0°10'	UP TO 10° ± 1°	120° UP TO 400° ± 0°10'
10° UP TO 50° ± 0°30'	OVER 400° ± 0°5'	10° UP TO 50° ± 0°30'	OVER 400° ± 0°5'
50° UP TO 120° ± 0°20'		50° UP TO 120° ± 0°20'	

STRAIGHTNESS	CIRCULARITY	PROFILE OF ANY LINE	POSITION	CIRCULAR RUN-OUT
FLATNESS	CYLINDRICITY	PROFILE OF ANY SURFACE	CONCENTRICITY	TOTAL RUN-OUT
PARALLELISM	PERPENDICULARITY	ANGULARITY	SYMMETRY	ENVELOPE PRINCIPLE

LEAST MATERIAL CONDITION
MAXIMUM MATERIAL CONDITION
PROJECTED TOLERANCE ZONE

REV	Detail of REV	Date:	Name:

THIS DRAWING IS THE PROPERTY OF BRIGHTWING TECHNOLOGIES PTY LTD AND MAY NOT BE COPIED OR REPRODUCED IN ANY FORM OR BYANY MEANS WHATSOEVER WITHOUTTHE WRITTEN CONSENT from BRIGHTWING TECHNOLOGIES Pty Ltd ANY INFRINGEMENT OF THIS WARNINGCONSTITUTES THEFT.

3 PROJECTION METHOD: RD ANGLE

	Name:	Date:
DRAWN:		
CHECKED:		
APPROVED:		
MFG:		
QA:		

SCALE: 1:5
FINISH: MATERIAL:

FILE NAME:	A090615
DESCRIPTION:	1300GS Small Top Box Bracket
DWG No.	
DATE PRINTED	11/06/2024
SHEET	1 # 4
REV	A
SURFACE TREATMENT:	

MOTORRADICAL
Outlast Adventure