ITEM NO.	PART NUMBER	DESCRIPTION	Material	Stocksize	QTY.
1	P090695001	Bottom Plate	SS304	3.0	1
2	P090695002	Centre Plate	ALU1200H4	4.5	1
3	P090695003	Top Plate	SS304	2.0	1
4	WFST-D1587SS-M05	NUT Dome Head M05 SS			4
5	WFST-D912SS-M05x016	Hexagon Socket Countersunk Head Cap Screw SS -M05x016			4

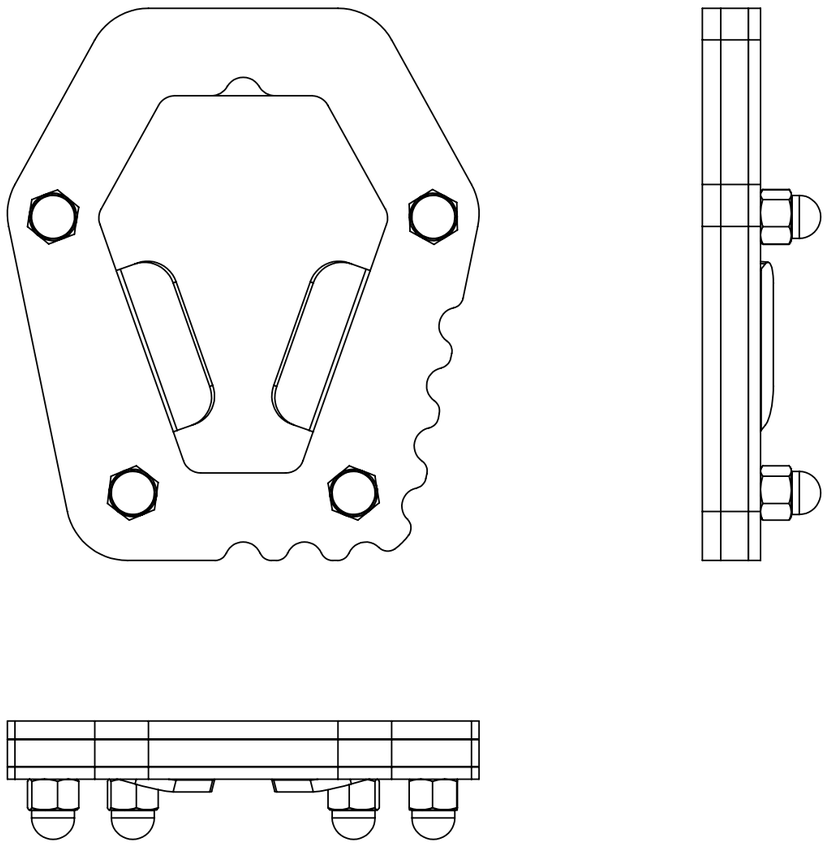

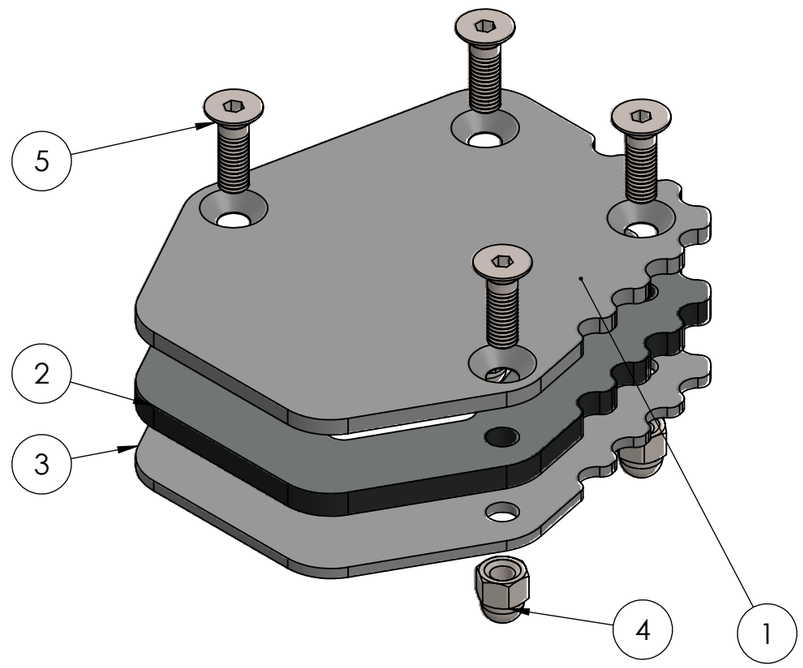

ALL METRIC THREAD TOL: TO 6H (INTERNAL) AND 6g (EXTERNAL) U.O.S
REMOVE ALL SHARP EDGES WHERE APPLICABLE.

MACHINING TOLERANCE		GENERAL TOLERANCE	
ISO 2780-1 U.O.S LINEAR DIMENSIONS CLASS: FINE		ISO 2780-1 U.O.S LINEAR DIMENSIONS CLASS: MEDIUM	
0.5 UP TO 3 ± 0.05	120 UP TO 400 ± 0.2	0.5 UP TO 3 ± 0.1	120 UP TO 400 ± 0.5
3 UP TO 6 ± 0.05	400 UP TO 1000 ± 0.3	3 UP TO 6 ± 0.1	400 UP TO 1000 ± 0.8
6 UP TO 30 ± 0.1	1000 UP TO 2000 ± 0.5	6 UP TO 30 ± 0.2	1000 UP TO 2000 ± 1.2
30 UP TO 120 ± 0.15	2000 UP TO 4000 ± 1.0	30 UP TO 120 ± 0.3	2000 UP TO 4000 ± 2.0
ANGULAR DIMENSIONS		ANGULAR DIMENSIONS	
UP TO 10° ± 1°	120° UP TO 400° ± 0°10'	UP TO 10° ± 1°	120° UP TO 400° ± 0°10'
10° UP TO 50° ± 0°30'	OVER 400° ± 0°5'	10° UP TO 50° ± 0°30'	OVER 400° ± 0°5'
50° UP TO 120° ± 0°20'		50° UP TO 120° ± 0°20'	

REV	Detail of REV	Date:	Name:

	Name:	Date:
DRAWN:		
CHECKED:		
APPROVED:		
MFG:		
QA:		

FILE NAME:	A090695
DESCRIPTION:	BMW F900GS Side Stand Extender
DWG No.	
DATE PRINTED	09/09/2024
SHEET	1 # 5
REV	A
SURFACE TREATMENT:	

STRAIGHTNESS	CIRCULARITY	PROFILE OF ANY LINE	POSITION	CIRCULAR RUN-OUT
FLATNESS	CYLINDRICITY	PROFILE OF ANY SURFACE	CONCENTRICITY	TOTAL RUN-OUT
PARALLELISM	PERPENDICULARITY	ANGULARITY	SYMMETRY	ENVELOPE PRINCIPLE

LEAST MATERIAL CONDITION
MAXIMUM MATERIAL CONDITION
PROJECTED TOLERANCE ZONE

THIS DRAWING IS THE PROPERTY OF BRIGHTWING TECHNOLOGIES PTY LTD AND MAY NOT BE COPIED OR REPRODUCED IN ANY FORM OR BYANY MEANS WHATSOEVER WITHOUTTHE WRITTEN CONSENT from BRIGHTWING TECHNOLOGIES Pty Ltd ANY INFRINGEMENT OF THIS WARNINGCONSTITUTES THEFT.

3 PROJECTION METHOD: RD ANGLE

SCALE: 1:1

FINISH: MATERIAL:

MOTORRADICAL
Outlast Adventure