ITEM NO.	PART NUMBER	DESCRIPTION	Material	StockSize	LENGTH	QTY.
3	P090870003	BMW 1250 GS Lower Crash Bars Mount 1	SS304	4.5		1
4	P090870004	BMW 1250 GS Lower Crash Bars Mount 2	SS304	4.5		1
5	P090870005	BMW 1250 GS Lower Crash Bars Mount 3	SS304	4.5		1
6	P090870006	BMW 1250 GS Lower Crash Bars Mount 4	SS304	4.5		1
7	P090870007	BMW 1250 GS Lower Crash Bars Spacer	SS304	4.5		3
8	P090870008W	PIPE 25.40 X 2.3	SS Tubing		910	1
9	P090870009W	PIPE 25.40 X 2.3	SS Tubing		400	1
10	P090870010W	PIPE 25.40 X 2.3	SS Tubing		260	1
11	P090870011W	BMW 1250 GS Lower Crash Bars Tube 4	SS Tubing		930	1
12	P090870012W	PIPE 25.40 X 3.2	SS Tubing		400	1
13	P090870013W	PIPE 25.40 X 3.2	SS Tubing		260	1
14	P090870014	BMW 1250 GS Lower Crash Bars Mount 5	SS304	4.5		1
15	P090870015	BMW 1250 GS Lower Crash Bars Mount 6	SS304	4.5		1
16	WFST-D985SS-M08	NUT Hex Nyloc M08 X 1.25mm SS				2
17	WFST-I4762SS-M08x030	Hexagon Socket Head Cap Screw SS-M08x030				2
18	WFST-I4762SS-M10x030	Hexagon Socket Head Cap Screw SS-M10x030				2
19	WFST-I7089SS-M08	Flat Washer SS - M08 - 16x09.0				4
20	WFST-I7089SS-M10	Flat Washer SS - M10 - 20x11.0				2

Process	Time (Min)
Laser Cut	
Bending	
Tube Cut & Bend	20
Welding CO2	30
Sand Blasting	30
Parts Picking	5
Packaging	15

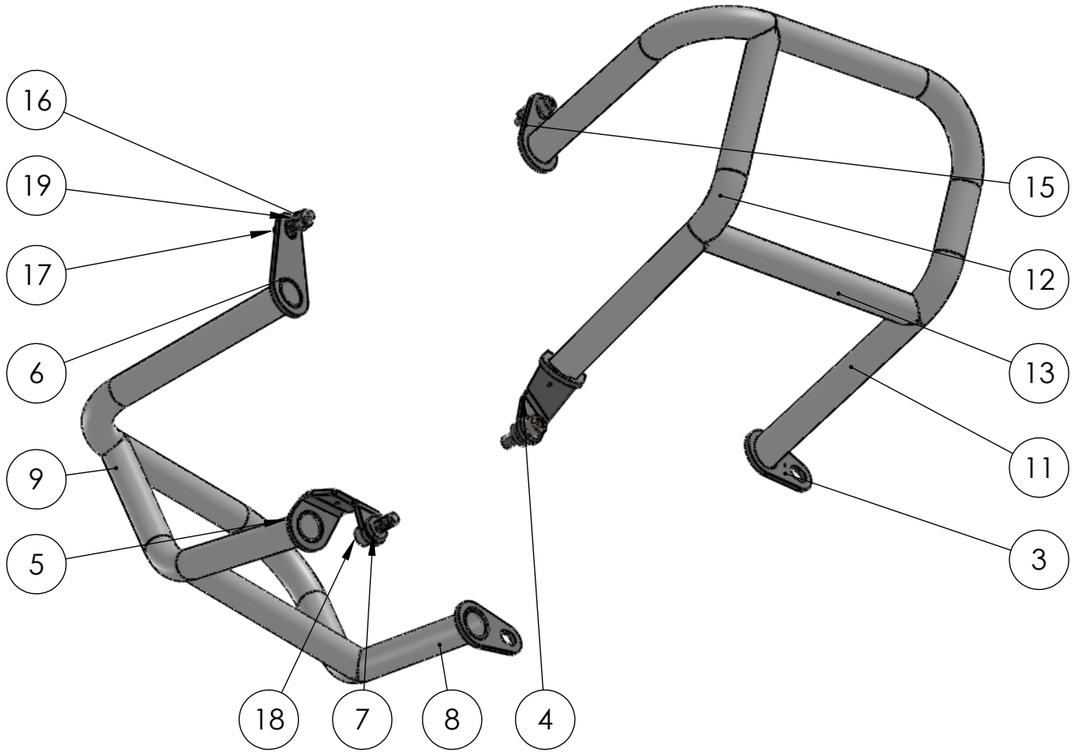

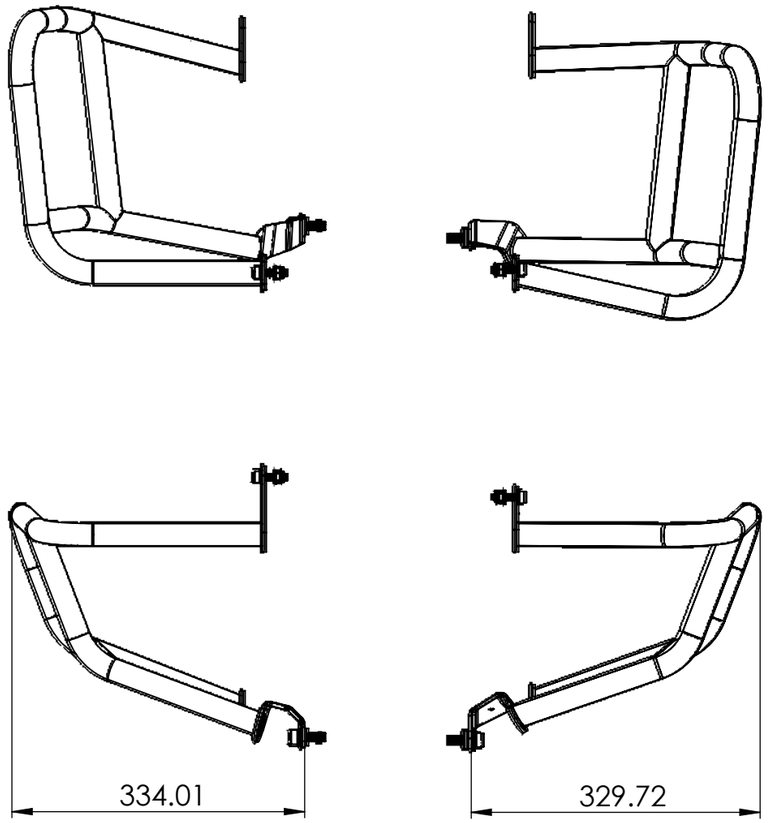

ALL METRIC THREAD TOL: TO 6H (INTERNAL) AND 6g (EXTERNAL) U.O.S
REMOVE ALL SHARP EDGES WHERE APPLICABLE.

MACHINING TOLERANCE		GENERAL TOLERANCE	
ISO 2780-1 U.O.S LINEAR DIMENSIONS CLASS: FINE		ISO 2780-1 U.O.S LINEAR DIMENSIONS CLASS: MEDIUM	
0.5 UP TO 3 ± 0.05	120 UP TO 400 ± 0.2	0.5 UP TO 3 ± 0.1	120 UP TO 400 ± 0.5
3 UP TO 6 ± 0.05	400 UP TO 1000 ± 0.3	3 UP TO 6 ± 0.1	400 UP TO 1000 ± 0.8
6 UP TO 30 ± 0.1	1000 UP TO 2000 ± 0.5	6 UP TO 30 ± 0.2	1000 UP TO 2000 ± 1.2
30 UP TO 120 ± 0.15	2000 UP TO 4000 ± 1.0	30 UP TO 120 ± 0.3	2000 UP TO 4000 ± 2.0
ANGULAR DIMENSIONS		ANGULAR DIMENSIONS	
UP TO 10° ± 1°	120° UP TO 400° ± 0°10'	UP TO 10° ± 1°	120° UP TO 400° ± 0°10'
10° UP TO 50° ± 0°30'	OVER 400° ± 0°5'	10° UP TO 50° ± 0°30'	OVER 400° ± 0°5'
50° UP TO 120° ± 0°20'		50° UP TO 120° ± 0°20'	

STRAIGHTNESS	CIRCULARITY	PROFILE OF ANY LINE	POSITION	CIRCULAR RUN-OUT	LEAST MATERIAL CONDITION
FLATNESS	CYLINDRICITY	PROFILE OF ANY SURFACE	CONCENTRICITY	TOTAL RUN-OUT	MAXIMUM MATERIAL CONDITION
PARALLELISM	PERPENDICULARITY	ANGULARITY	SYMMETRY	ENVELOPE PRINCIPLE	PROJECTED TOLERANCE ZONE

REV	Detail of REV	Date:	Name:

THIS DRAWING IS THE PROPERTY OF BRIGHTWING TECHNOLOGIES PTY LTD AND MAY NOT BE COPIED OR REPRODUCED IN ANY FORM OR BYANY MEANS WHATSOEVER WITHOUTTHE WRITTEN CONSENT from BRIGHTWING TECHNOLOGIES Pty Ltd ANY INFRINGEMENT OF THIS WARNINGCONSTITUTES THEFT.

3 PROJECTION METHOD: RD ANGLE

	Name:	Signature:	Date:
DRAWN:			
CHECKED:			
APPROVED:			
MFG:			
QA:			

SCALE: 1:7
FINISH:
MATERIAL:

FILE NAME:	A090870
DESCRIPTION:	BMW 1250 GS Lower Crash Bars
DWG No.	
DATE PRINTED	07/02/2024
SHEET	1 # 10
REV	D
SURFACE TREATMENT:	

MOTORRADICAL
Outlast Adventure