ITEM NO.	PART NUMBER	DESCRIPTION	MATERIAL	STOCK SIZE	QTY.
1	P090920001	BMW G310GS Chain Guard Cover Black Ferograin	ALU1200H4	2	1
2	P090920002	BMW G310 GS Chain Guard Cover	SS304	1.6	1
3	P090920003	BMW G310 GS Chain Guard Mounting Bracket	SS304	1.6	1
4	P090920004	BMW G310 GS Chain Guard Inner Mount	SS304	1.6	1
5	WFST-D127SS-M05	Spring washer SS - M05			14
6	WFST-D985SS-M05	NUT Hex Nyloc M05 X 0.80mm SS			11
7	WFST-I4762SS-M05x012	Hexagon Socket Head Cap Screw SS-M05x012			13
8	WFST-I4762SS-M05x016	Hexagon Socket Head Cap Screw SS-M05x016			1
9	WFST-I7089SS-M05	Flat Washer SS - M05 - 10x05.5			14

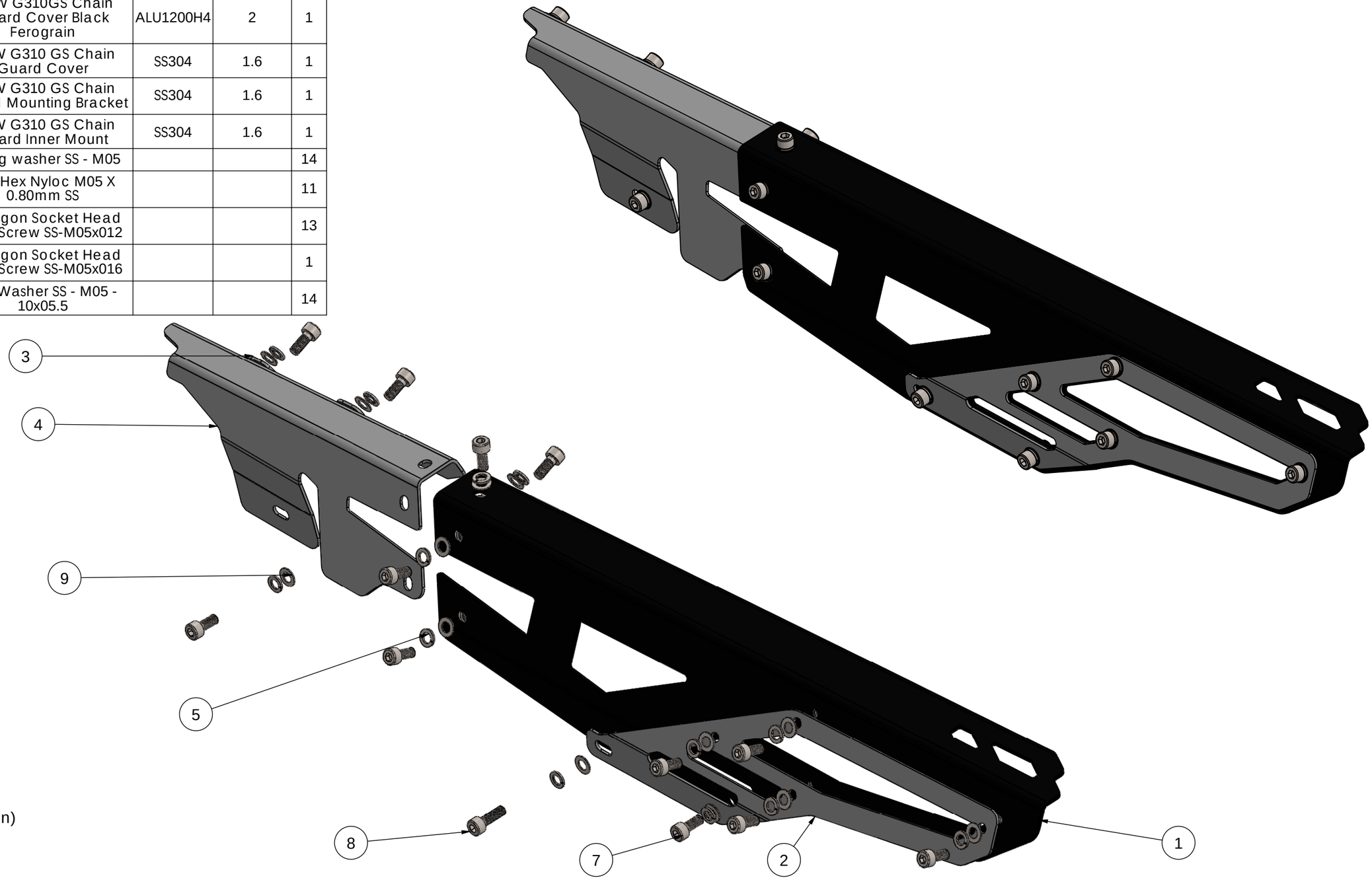

Processes Needed:

1. Bend
2. Clean (Deburr)
3. Sandblast
4. Powdercoat (Black Ferograin)
5. Assemble
6. Package

ALL METRIC THREAD TOL: TO 6H (INTERNAL) AND 6g (EXTERNAL) U.O.S
REMOVE ALL SHARP EDGES WHERE APPLICABLE.

MACHINING TOLERANCE		GENERAL TOLERANCE	
ISO 2780-1 U.O.S LINEAR DIMENSIONS CLASS: FINE		ISO 2780-1 U.O.S LINEAR DIMENSIONS CLASS: MEDIUM	
0.5 UP TO 3 Ñ 0.05	120 UP TO 400 Ñ 0.2	0.5 UP TO 3 Ñ 0.1	120 UP TO 400 Ñ 0.5
3 UP TO 6 Ñ 0.05	400 UP TO 1000 Ñ 0.3	3 UP TO 6 Ñ 0.1	400 UP TO 1000 Ñ 0.8
6 UP TO 30 Ñ 0.1	1000 UP TO 2000 Ñ 0.5	6 UP TO 30 Ñ 0.2	1000 UP TO 2000 Ñ 1.2
30 UP TO 120 Ñ 0.15	2000 UP TO 4000 Ñ 1.0	30 UP TO 120 Ñ 0.3	2000 UP TO 4000 Ñ 2.0
ANGULAR DIMENSIONS		ANGULAR DIMENSIONS	
UP TO 10Á Ñ 1Á	120Á UP TO 400Á Ñ 0Á10'	UP TO 10Á Ñ 1Á	120Á UP TO 400Á Ñ 0Á10'
10Á UP TO 50Á Ñ 0Á30'	OVER 400Á Ñ 0Á5'	10Á UP TO 50Á Ñ 0Á30'	OVER 400Á Ñ 0Á5'
50Á UP TO 120Á Ñ 0Á20'		50Á UP TO 120Á Ñ 0Á20'	

STRAIGHTNESS	CIRCULARITY	PROFILE OF ANY LINE	POSITION	CIRCULAR RUN-OUT	LEAST MATERIAL CONDITION
FLATNESS	CYLINDRICITY	PROFILE OF ANY SURFACE	CONCENTRICITY	TOTAL RUN-OUT	MAXIMUM MATERIAL CONDITION
PARALLELISM	PERPENDICULARITY	ANGULARITY	SYMMETRY	ENVELOPE PRINCIPLE	PROJECTED TOLERANCE ZONE

REV	Detail of REV	Date:	Name:		Name:	Signature:	Date:
				DRAWN:			
				CHECKED:			
				APPROVED:			
				MFG:			
				QA:			

THIS DRAWING IS THE PROPERTY OF BRIGHTWING TECHNOLOGIES PTY LTD AND MAY NOT BE COPIED OR REPRODUCED IN ANY FORM OR BYANY MEANS WHATSOEVER WITHOUTTHE WRITTEN CONSENT from BRIGHTWING TECHNOLOGIES Pty Ltd ANY INFRINGEMENT OF THIS WARNINGCONSTITUTES THEFT.

3 PROJECTION METHOD: RD ANGLE

SCALE: 1:5
FINISH:
MATERIAL:

FILE NAME:	A090920
DESCRIPTION:	BMW G310GS Chain Guard
DWG No.	A090920
DATE PRINTED:	18/04/2018
SHEET	1 # 7
REV	B
SURFACE TREATMENT:	

MOTORRADICAL
Engineered to Outlast Adventure
BrightWing TECHNOLOGIES