ITEM NO.	PART NUMBER	Material	Stocksize	DESCRIPTION	QTY.
1	P090955001	SS304	1.6	850GS Headlight Guard P1	1
2	P090955002	SS304	1.6	850GS Headlight Guard P1	1
3	P090955003	ALU1200H4	3	850GS Headlight Guard P3	1
4	P090955004	Polycarb	3	850GS Headlight Guard P4	1
5	WENG-BUS-2055	Aluminium		Spacer 8L x 6.5ID x 10OD	2
6	WFST-D985SS-M05			NUT Hex Nyloc M05 X 0.80mm SS	8
7	WFST-I7380SS-M05x10			Socket Button Head Cap Screw-SS-M05x10	8
8	WFST-I7380SS-M05x20			Socket Button Head Cap Screw-SS-M05x20	2

Process	Time (Min)
Laser Cut	
Bending	
Powdercoating - Black	
Shaking	30
Assemble	2
Packaging	2

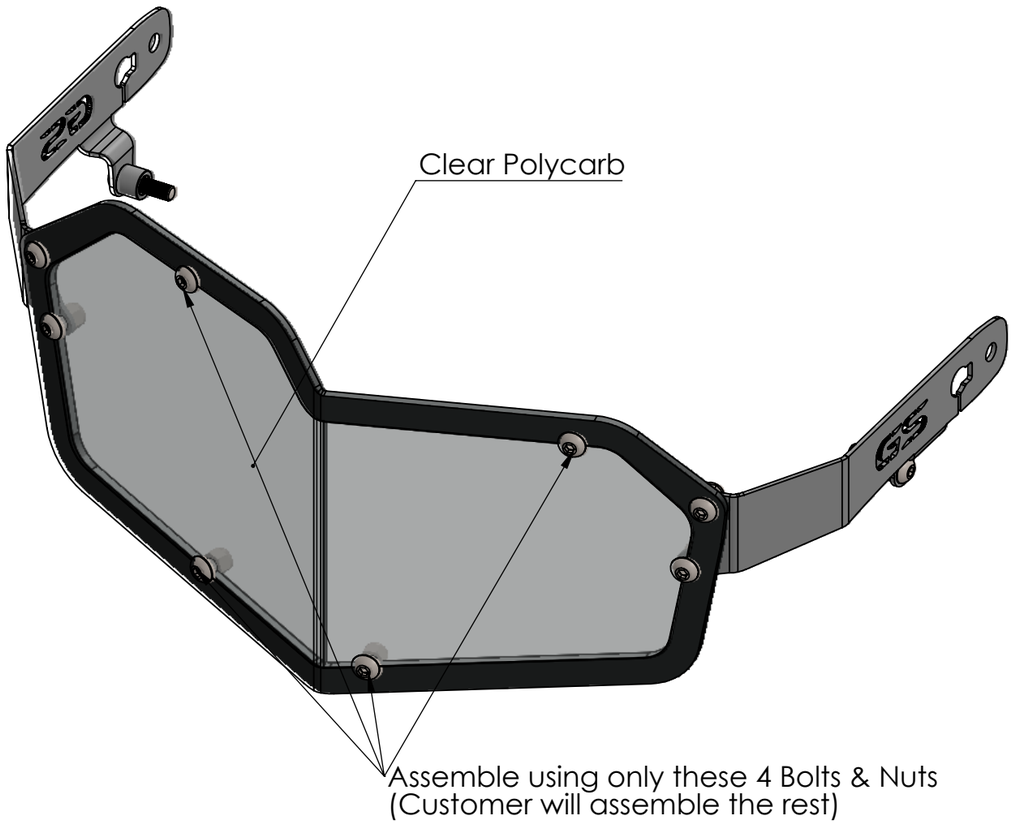

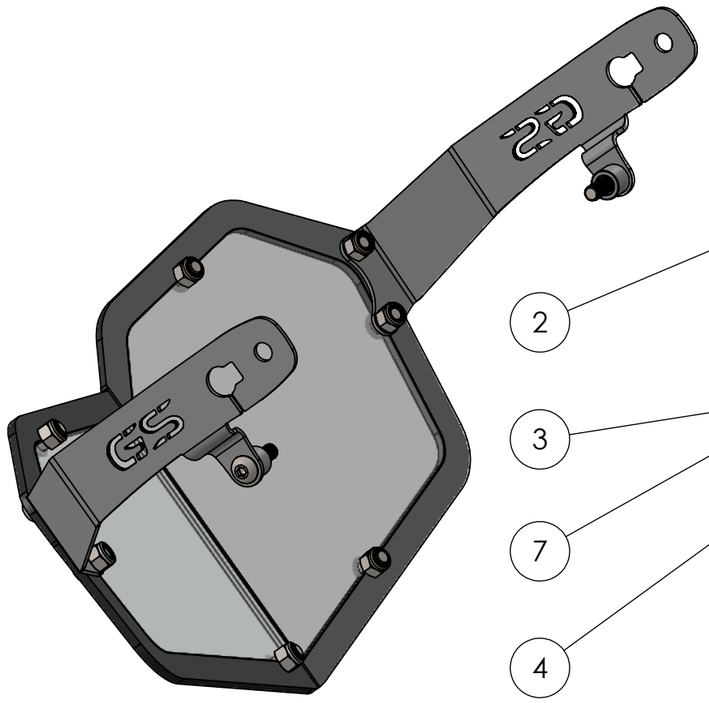

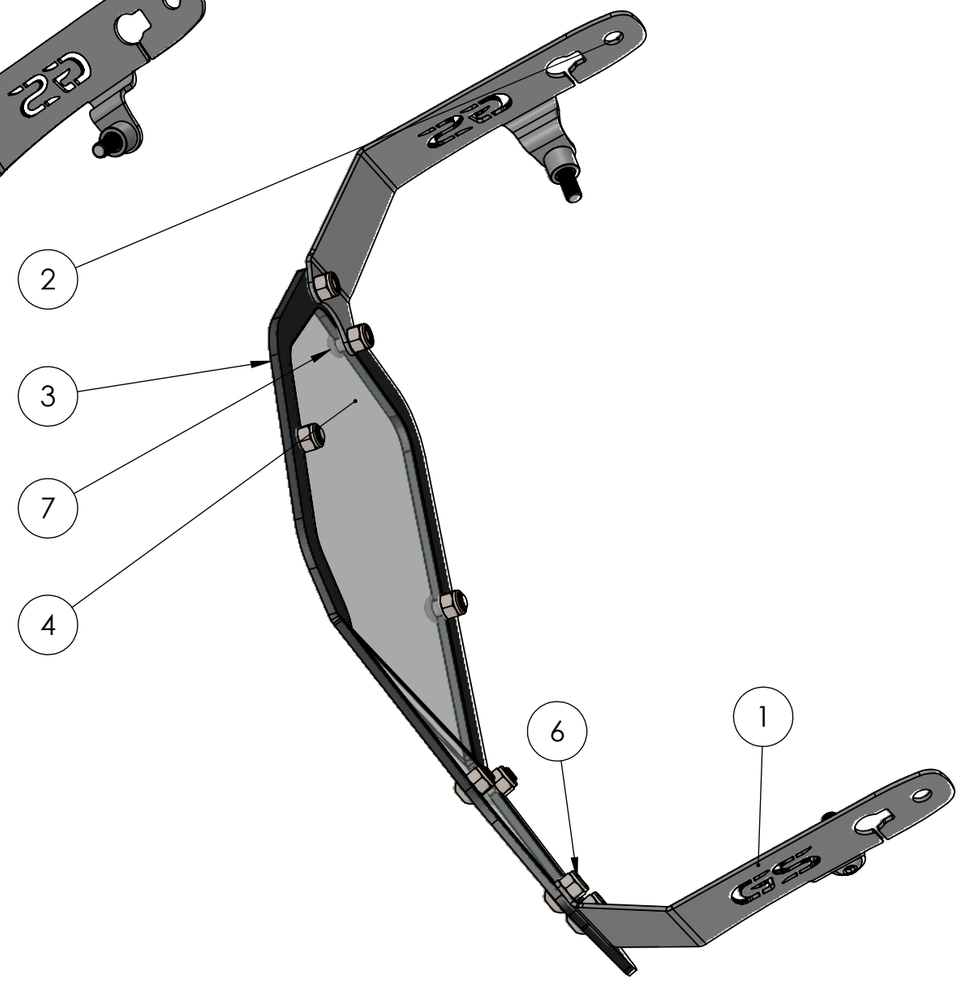

ALL METRIC THREAD TOL: TO 6H (INTERNAL) AND 6g (EXTERNAL) U.O.S
REMOVE ALL SHARP EDGES WHERE APPLICABLE.

MACHINING TOLERANCE		GENERAL TOLERANCE	
ISO 2780-1 U.O.S LINEAR DIMENSIONS CLASS: FINE		ISO 2780-1 U.O.S LINEAR DIMENSIONS CLASS: MEDIUM	
0.5 UP TO 3 ± 0.05	120 UP TO 400 ± 0.2	0.5 UP TO 3 ± 0.1	120 UP TO 400 ± 0.5
3 UP TO 6 ± 0.05	400 UP TO 1000 ± 0.3	3 UP TO 6 ± 0.1	400 UP TO 1000 ± 0.8
6 UP TO 30 ± 0.1	1000 UP TO 2000 ± 0.5	6 UP TO 30 ± 0.2	1000 UP TO 2000 ± 1.2
30 UP TO 120 ± 0.15	2000 UP TO 4000 ± 1.0	30 UP TO 120 ± 0.3	2000 UP TO 4000 ± 2.0
ANGULAR DIMENSIONS		ANGULAR DIMENSIONS	
UP TO 10° ± 1°	120° UP TO 400° ± 0°10'	UP TO 10° ± 1°	120° UP TO 400° ± 0°10'
10° UP TO 50° ± 0°30'	OVER 400° ± 0°5'	10° UP TO 50° ± 0°30'	OVER 400° ± 0°5'
50° UP TO 120° ± 0°20'		50° UP TO 120° ± 0°20'	

STRAIGHTNESS	CIRCULARITY	PROFILE OF ANY LINE	POSITION	CIRCULAR RUN-OUT
FLATNESS	CYLINDRICITY	PROFILE OF ANY SURFACE	CONCENTRICITY	TOTAL RUN-OUT
PARALLELISM	PERPENDICULARITY	ANGULARITY	SYMMETRY	ENVELOPE PRINCIPLE

LEAST MATERIAL CONDITION
MAXIMUM MATERIAL CONDITION
PROJECTED TOLERANCE ZONE

REV	Detail of REV	Date:	Name:

THIS DRAWING IS THE PROPERTY OF BRIGHTWING TECHNOLOGIES PTY LTD AND MAY NOT BE COPIED OR REPRODUCED IN ANY FORM OR BYANY MEANS WHATSOEVER WITHOUTTHE WRITTEN CONSENT from BRIGHTWING TECHNOLOGIES Pty Ltd ANY INFRINGEMENT OF THIS WARNINGCONSTITUTES THEFT.

3 PROJECTION METHOD: RD ANGLE

	Name:	Signature:	Date:
DRAWN:			
CHECKED:			
APPROVED:			
MFG:			
QA:			

SCALE: 1:5
FINISH:
MATERIAL:

FILE NAME:	A090955
DESCRIPTION:	850GS Headlight Guard
DWG No.	
DATE PRINTED	21/07/2025
SHEET	1 # 7
REV	E
SURFACE TREATMENT:	

MOTORRADICAL
Outlast Adventure