ITEM NO.	PART NUMBER	DESCRIPTION	Material	StockSize	QTY.
1	P090965001	BMW 850GSA Crash Bar Supports Mount 1	SS304	4.5	2
2	P090965002W	BMW 850GSA Crash Bar LH Support Tube			1
3	P090965003	BMW 850GSA Crash Bar Support Clamp 25mm	SS304	2	2
4	P090965004W	BMW 850GSA Crash Bar RH Support Tube			1
5	WFST-D127SS-M12	Spring washer SS - M12			2
6	WFST-D985SS-M06	NUT Hex Nyloc M06 X 1.00mm SS			2
7	WFST-I4762SS-M12x090	Hexagon Socket Head Cap Screw SS-M12x090			2
8	WFST-I7089SS-M06	Flat Washer SS - M06 - 12x06.6			4
9	WFST-I7380SS-M06x40	Socket Button Head Cap Screw-SS-M06x40			2

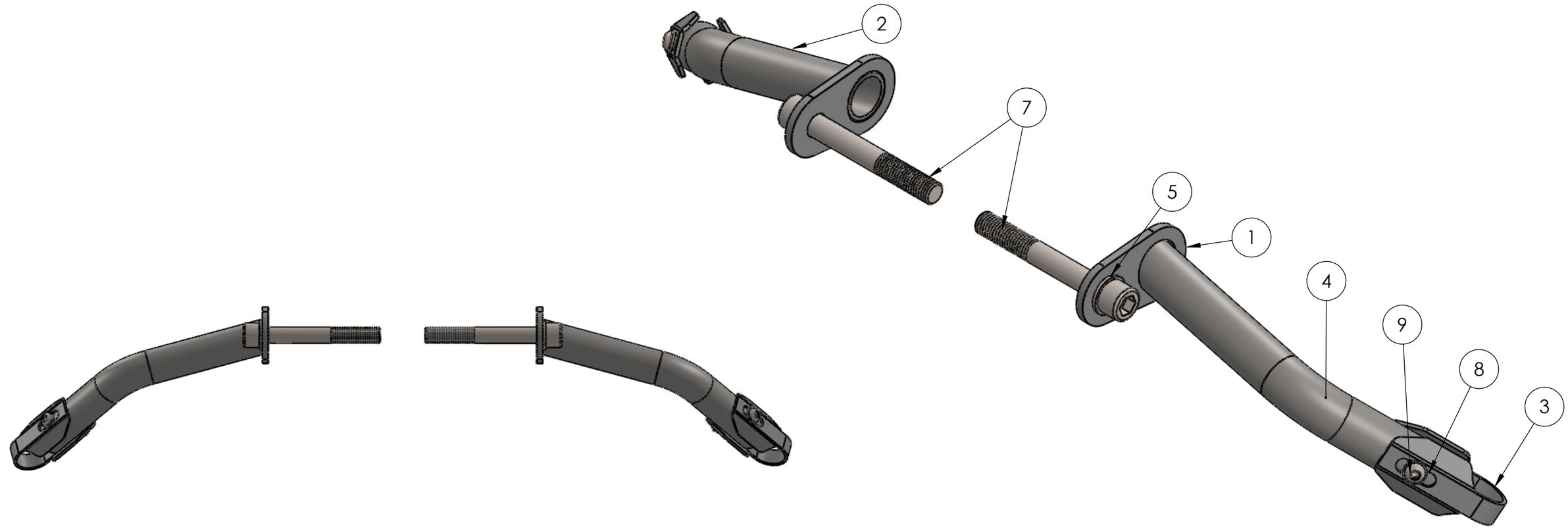

ALL METRIC THREAD TOL: TO 6H (INTERNAL) AND 6g (EXTERNAL) U.O.S
REMOVE ALL SHARP EDGES WHERE APPLICABLE.

MACHINING TOLERANCE		GENERAL TOLERANCE	
ISO 2780-1 U.O.S LINEAR DIMENSIONS CLASS: FINE		ISO 2780-1 U.O.S LINEAR DIMENSIONS CLASS: MEDIUM	
0.5 UP TO 3 ± 0.05	120 UP TO 400 ± 0.2	0.5 UP TO 3 ± 0.1	120 UP TO 400 ± 0.5
3 UP TO 6 ± 0.05	400 UP TO 1000 ± 0.3	3 UP TO 6 ± 0.1	400 UP TO 1000 ± 0.8
6 UP TO 30 ± 0.1	1000 UP TO 2000 ± 0.5	6 UP TO 30 ± 0.2	1000 UP TO 2000 ± 1.2
30 UP TO 120 ± 0.15	2000 UP TO 4000 ± 1.0	30 UP TO 120 ± 0.3	2000 UP TO 4000 ± 2.0
ANGULAR DIMENSIONS		ANGULAR DIMENSIONS	
UP TO 10° ± 1°	120° UP TO 400° ± 0°10'	UP TO 10° ± 1°	120° UP TO 400° ± 0°10'
10° UP TO 50° ± 0°30'	OVER 400° ± 0°5'	10° UP TO 50° ± 0°30'	OVER 400° ± 0°5'
50° UP TO 120° ± 0°20'		50° UP TO 120° ± 0°20'	

STRAIGHTNESS	CIRCULARITY	PROFILE OF ANY LINE	POSITION	CIRCULAR RUN-OUT	LEAST MATERIAL CONDITION
FLATNESS	CYLINDRICITY	PROFILE OF ANY SURFACE	CONCENTRICITY	TOTAL RUN-OUT	MAXIMUM MATERIAL CONDITION
PARALLELISM	PERPENDICULARITY	ANGULARITY	SYMMETRY	ENVELOPE PRINCIPLE	PROJECTED TOLERANCE ZONE

REV	Detail of REV	Date:	Name:

THIS DRAWING IS THE PROPERTY OF BRIGHTWING TECHNOLOGIES PTY LTD AND MAY NOT BE COPIED OR REPRODUCED IN ANY FORM OR BYANY MEANS WHATSOEVER WITHOUTTHE WRITTEN CONSENT from BRIGHTWING TECHNOLOGIES Pty Ltd ANY INFRINGEMENT OF THIS WARNINGCONSTITUTES THEFT.

3 PROJECTION METHOD: RD ANGLE

	Name:	Signature:	Date:
DRAWN:			
CHECKED:			
APPROVED:			
MFG:			
QA:			

SCALE: 1:5

FINISH:

MATERIAL:

FILE NAME:	A090965
DESCRIPTION:	BMW 850GSA Crash Bar Supports
DWG No.	
DATE PRINTED	05/03/2024
SHEET	1 # 5
REV	D
SURFACE TREATMENT:	

MOTORRADICAL
Outlast Adventure