ITEM NO.	PART NUMBER	DESCRIPTION	Material	Stocksize	QTY.
1	P090970001	850GS&A Bash Plate P1	ALU1200H4	4.5	1
2	WPLA-MOU-1385	Circular Rubber Mount, M6 Male-Female			4
3	WFST-D912SS-M06x008	Hexagon Socket Countersunk Head Cap Screw SS -M06x008			4

Process	Time (Min)
Laser Cut	
Sanding	10
Bending	
Welding TIG	15
Grinding	5
Countersinking	5
Powdercoating - Silver Ferrograin-Vx95154	
Parts Picking	5
Assembly	5
Packaging	10

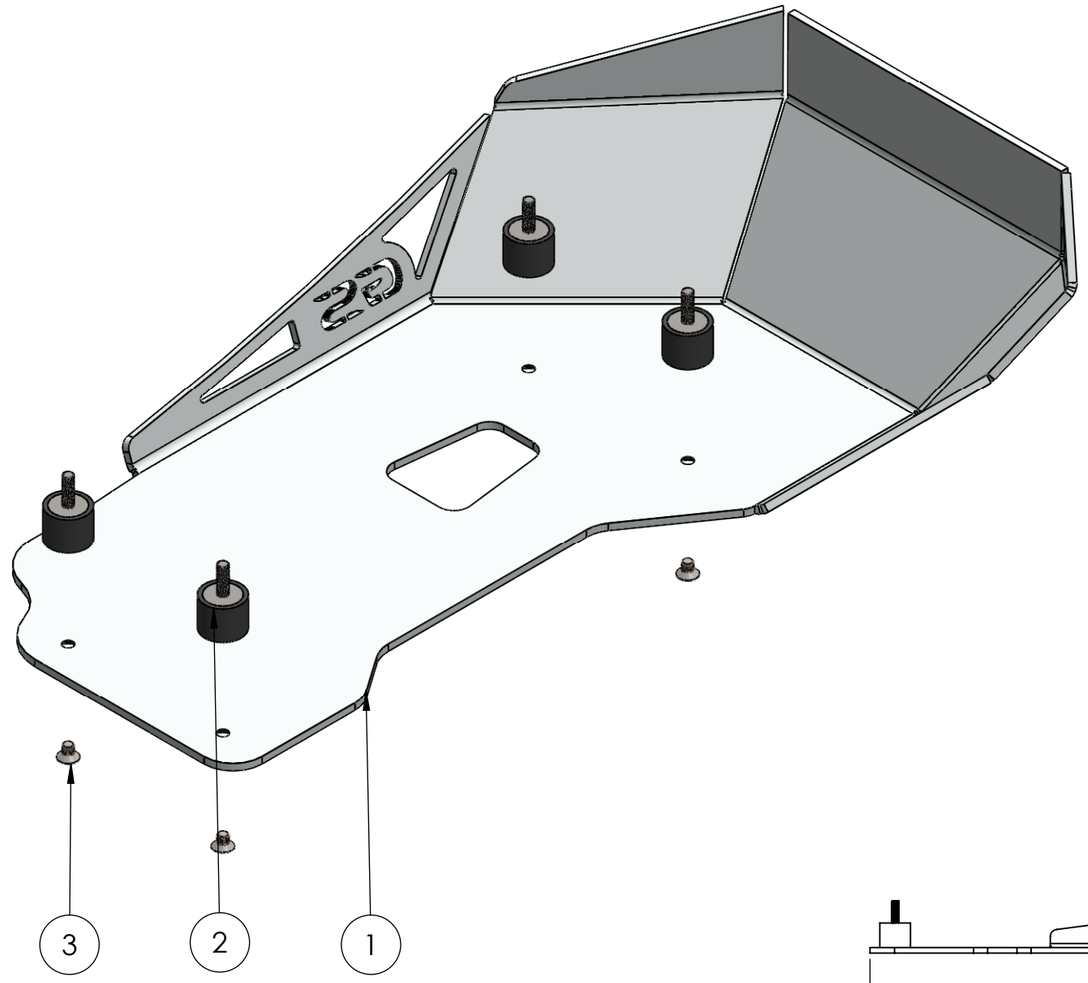

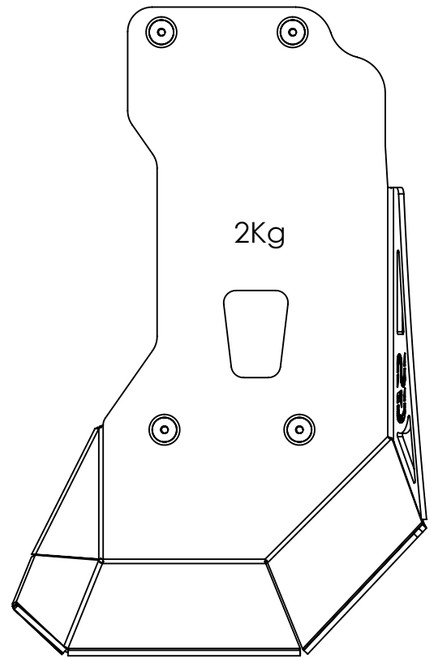

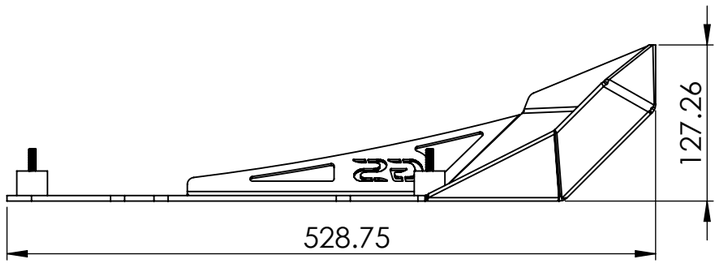

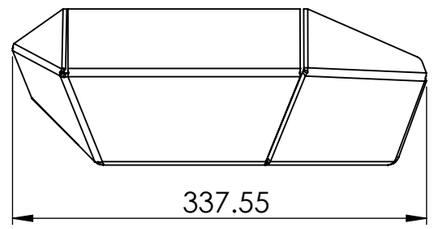

ALL METRIC THREAD TOL: TO 6H (INTERNAL) AND 6g (EXTERNAL) U.O.S
REMOVE ALL SHARP EDGES WHERE APPLICABLE.

MACHINING TOLERANCE		GENERAL TOLERANCE	
ISO 2780-1 U.O.S LINEAR DIMENSIONS CLASS: FINE		ISO 2780-1 U.O.S LINEAR DIMENSIONS CLASS: MEDIUM	
0.5 UP TO 3 ± 0.05	120 UP TO 400 ± 0.2	0.5 UP TO 3 ± 0.1	120 UP TO 400 ± 0.5
3 UP TO 6 ± 0.05	400 UP TO 1000 ± 0.3	3 UP TO 6 ± 0.1	400 UP TO 1000 ± 0.8
6 UP TO 30 ± 0.1	1000 UP TO 2000 ± 0.5	6 UP TO 30 ± 0.2	1000 UP TO 2000 ± 1.2
30 UP TO 120 ± 0.15	2000 UP TO 4000 ± 1.0	30 UP TO 120 ± 0.3	2000 UP TO 4000 ± 2.0
ANGULAR DIMENSIONS		ANGULAR DIMENSIONS	
UP TO 10° ± 1°	120° UP TO 400° ± 0°10'	UP TO 10° ± 1°	120° UP TO 400° ± 0°10'
10° UP TO 50° ± 0°30'	OVER 400° ± 0°5'	10° UP TO 50° ± 0°30'	OVER 400° ± 0°5'
50° UP TO 120° ± 0°20'		50° UP TO 120° ± 0°20'	

REV	Detail of REV	Date:	Name:		Name:	Signature:	Date:
				DRAWN:			
				CHECKED:			
				APPROVED:			
				MFG:			
				QA:			

FILE NAME:	A090970
DESCRIPTION:	850GS&A Bash Plate Silver
DWG No.	
DATE PRINTED:	04/02/2022
SHEET	1 # 4
REV	D
SURFACE TREATMENT:	

STRAIGHTNESS | CIRCULARITY | PROFILE OF ANY LINE | POSITION | CIRCULAR RUN-OUT | LEAST MATERIAL CONDITION
FLATNESS | CYLINDRICITY | PROFILE OF ANY SURFACE | CONCENTRICITY | TOTAL RUN-OUT | MAXIMUM MATERIAL CONDITION
PARALLELISM | PERPENDICULARITY | ANGULARITY | SYMMETRY | ENVELOPE PRINCIPLE | PROJECTED TOLERANCE ZONE

THIS DRAWING IS THE PROPERTY OF BRIGHTWING TECHNOLOGIES PTY LTD AND MAY NOT BE COPIED OR REPRODUCED IN ANY FORM OR BYANY MEANS WHATSOEVER WITHOUTTHE WRITTEN CONSENT from BRIGHTWING TECHNOLOGIES Pty Ltd ANY INFRINGEMENT OF THIS WARNINGCONSTITUTES THEFT.

3 PROJECTION METHOD: RD ANGLE

SCALE: 1:5
FINISH:
MATERIAL:

MOTORRADICAL
Outlast Adventure