ITEM NO.	PART NUMBER	DESCRIPTION	Material	Stocksize	QTY.
1	P090995001	BMW 850GS Mount 1	SS304	3	1
2	P090995002	BMW 850GS Mount 2	SS304	3	1
3	P090995003	BMW 850GS Mount 3	SS304	3	1
4	P090995004	BMW 850GS Mount 4	SS304	3	1
5	P090995005	BMW 850GS Mount 5	SS304	3	1
6	P090995006	BMW 850GS Mount 6	SS304	3	1
7	P090995007W	BMW 850GS Pannier Rear Support Pipe	SS304	1.5	1
8	P090995008	BMW 850GS Rear Support Bracket 1	SS304	3	1
9	P090995009	BMW 850GS Rear Support Bracket 2	SS304	3	1

ITEM NO.	PART NUMBER	DESCRIPTION	Material	Stocksize	QTY.
10	P090995010	BMW 850GS Foot Peg Mount	SS304	3	2
11	P090995032	BMW 850GS Spacer 1	SS304	3	2
12	P090995033	BMW 850GS Spacer 2	SS304	6	2
13	P120000008	1200 K50 LC Pannier Frame Tab 1	SS304	3	4
14	P120000010W	Flat Hoop Half Pipe	SS304	19.1 X 1.5mm	2
15	P120000014	1200 K50 LC Pannier Frame Tab 2	SS304	3	4
16	P120000017W	1200 K50 LC RHS Pannier Frame	SS304	19.1 X 1.5mm	1
17	P120000017W	1200 K50 LC RHS Pannier Frame	SS304	19.1 X 1.5mm	1
18	WFST-D127SS-M08	Spring washer SS - M08			2
19	WFST-D80704ZB-M08	Cage Nut M8	N/A	M8	2
20	WFST-D985SS-M08	NUT Hex Nyloc M08 X 1.25mm SS			2
21	WFST-I7380SS-M08x20	Socket Button Head Cap Screw-SS-M08x20			4
22	WFST-I7380SS-M08x30	Socket Button Head Cap Screw-SS-M08x30			2
23	WFST-I7380SS-M08x50	Socket Button Head Cap Screw-SS-M08x50			2

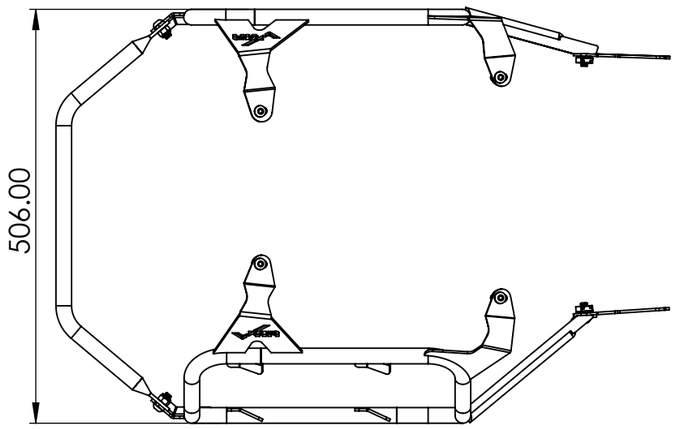

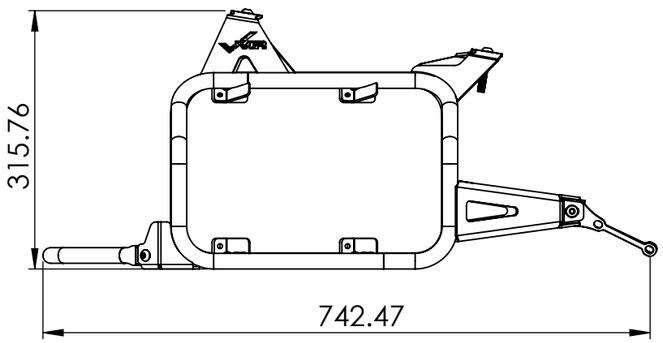

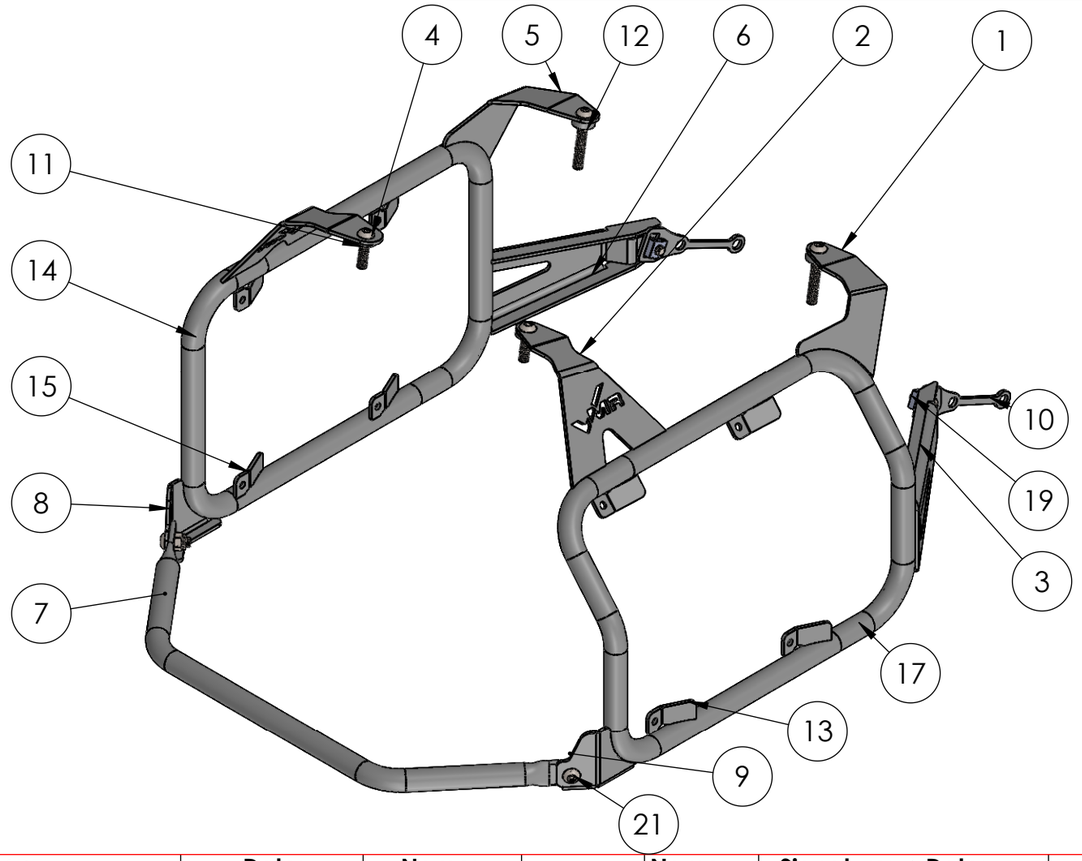

Process	Time (Min)
Laser Cut	
Bending	
Tube Cut & Bend	15
Welding CO2	20
Welding TIG	10
Sand Blasting	15
Parts Picking	5
Assembly	5
Packaging	10

Assemble x 2

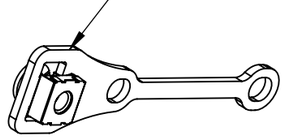

ALL METRIC THREAD TOL: TO 6H (INTERNAL) AND 6g (EXTERNAL) U.O.S
REMOVE ALL SHARP EDGES WHERE APPLICABLE.

MACHINING TOLERANCE		GENERAL TOLERANCE	
ISO 2780-1 U.O.S LINEAR DIMENSIONS CLASS: FINE		ISO 2780-1 U.O.S LINEAR DIMENSIONS CLASS: MEDIUM	
0.5 UP TO 3 ± 0.05	120 UP TO 400 ± 0.2	0.5 UP TO 3 ± 0.1	120 UP TO 400 ± 0.5
3 UP TO 6 ± 0.05	400 UP TO 1000 ± 0.3	3 UP TO 6 ± 0.1	400 UP TO 1000 ± 0.8
6 UP TO 30 ± 0.1	1000 UP TO 2000 ± 0.5	6 UP TO 30 ± 0.2	1000 UP TO 2000 ± 1.2
30 UP TO 120 ± 0.15	2000 UP TO 4000 ± 1.0	30 UP TO 120 ± 0.3	2000 UP TO 4000 ± 2.0
ANGULAR DIMENSIONS		ANGULAR DIMENSIONS	
UP TO 10° ± 1°	120° UP TO 400° ± 0°10'	UP TO 10° ± 1°	120° UP TO 400° ± 0°10'
10° UP TO 50° ± 0°30'	OVER 400° ± 0°5'	10° UP TO 50° ± 0°30'	OVER 400° ± 0°5'
50° UP TO 120° ± 0°20'		50° UP TO 120° ± 0°20'	

STRAIGHTNESS	CIRCULARITY	PROFILE OF ANY LINE	POSITION	CIRCULAR RUN-OUT	LEAST MATERIAL CONDITION
FLATNESS	CYLINDRICITY	PROFILE OF ANY SURFACE	CONCENTRICITY	TOTAL RUN-OUT	MAXIMUM MATERIAL CONDITION
PARALLELISM	PERPENDICULARITY	ANGULARITY	SYMMETRY	ENVELOPE PRINCIPLE	PROJECTED TOLERANCE ZONE

REV	Detail of REV	Date:	Name:

THIS DRAWING IS THE PROPERTY OF BRIGHTWING TECHNOLOGIES PTY LTD AND MAY NOT BE COPIED OR REPRODUCED IN ANY FORM OR BYANY MEANS WHATSOEVER WITHOUTTHE WRITTEN CONSENT from BRIGHTWING TECHNOLOGIES Pty Ltd ANY INFRINGEMENT OF THIS WARNINGCONSTITUTES THEFT.

3 PROJECTION METHOD: RD ANGLE

	Name:	Signature:	Date:
DRAWN:			
CHECKED:			
APPROVED:			
MFG:			
QA:			

SCALE: 1:7.5
FINISH:
MATERIAL:

FILE NAME:	A090995
DESCRIPTION:	BMW 850GS Pannier Frames
DWG No.	
DATE PRINTED:	14/03/2022
SHEET	1 # 14
REV	D
SURFACE TREATMENT:	

MOTORRADICAL
Outlast Adventure